Operating and Installation Instructions
Refrigerators

To prevent accidents and machine damage, read these instructions **before** installation or use.

en-US, CA

M.-Nr. 10 785 080

Contents

IMPORTANT SAFETY INSTRUCTIONS 5

Caring for the environment 13

Installation information 14
Installation location 14
Climate class 15
Installation notes 15
Load-bearing capacity of the niche floor 15
Door hinging 15
Adjoining cabinetry/units 15
Ventilation 16
Side-by-side 16

Installation dimensions 18
Dimensions when the appliance door is open (opening angle 90°) 22
Dimensions when the appliance door is open (opening angle 115°) 25

Building in the appliance 28
Before starting 28
Tools required 28
Aligning the installation niche 29
Checking the installation niche 29
Before installation 30
Preparing the installation niche 31
Pushing the appliance into the niche 33
Aligning the appliance 35
Securing the appliance in the niche 37
Securing the base cover plate and the baseboard 38

Electrical connection 39

How to save energy 41

Guide to the appliance 43
Main screen 45
Settings mode 46
Symbols in settings mode 47

Accessories 48
Accessories supplied 48
Stainless steel front panels 48
Optional accessories 49

Contents

Before first use 50
Before first use 50
Sticking on the SmartFresh zone labels 50
Inserting the Active AirClean filters 51
Using the appliance 51
Starting up for the first time 52

Switching on and off 53
Turning off for longer periods of time 53

Selecting additional settings 54
Switching Keypad Lock on or off 54
Adjusting the temperature in the SmartFresh zone (dry compartment) 54
Switching Eco Mode on or off 55
Performing a Self Test 55
Switching on Door Assistant 56
Switching off Door Assistant 57
Setting up Miele@home 58
Switching off Demo Mode 62
Resetting the settings to their default settings 62
Switching Sabbath Mode On/Off 64
Switching on, switching off, or resetting the Display Active AirClean Filter 65

The correct temperature 67
... in the refrigerator section and in the SmartFresh zone 67
Automatic cold air circulation (DynaCool) 67
Setting the temperature 67
Adjusting the temperature in the dry compartment of the SmartFresh zone ... 68
Temperature range 68

Using Automatic SuperCool 69

Door alarm 70

Adjusting the interior fittings 71
Moving the shelves in the appliance door 71
Moving the adjustable shelves 71
Removing the hanging drawer 72
Removing compartments from the Fridge Zone 72

Storing food in the refrigerator section 73
Different storage zones 73
Food which is not suitable for storage in the refrigerator section 74
Notes on buying food 75
Storing food correctly 75

Contents

Storing food in the SmartFresh zone ... 76
SmartFresh zone ... 76
Humidity-controlled compartment with moisture regulator ... 76
Regulating the humidity level in the humidity-controlled compartment ... 77
Dry compartment with adjustable temperature ... 78

Automatic defrosting ... 80

Cleaning and care ... 81
Cleaning agents ... 81
Before cleaning the appliance ... 82
Interior and accessories ... 82
Cleaning the door seal ... 83
Cleaning the ventilation grilles ... 83

Frequently Asked Questions ... 84

Causes of noises ... 89

Technical Service ... 90
Contact in case of fault ... 90
Warranty ... 90

Declaration of conformity ... 91

Copyright and licenses ... 92

This appliance complies with all statutory safety requirements. Please note that inappropriate use can lead to personal injury and damage to property.

To avoid the risk of accidents and damage to the appliance, please read these instructions carefully before using it for the first time. They contain important notes on installation, safety, use and maintenance.

Miele cannot be held liable for non-compliance with these instructions.

Keep these instructions in a safe place and ensure that new users are familiar with the contents. Pass them on to any future owner.

⚠ Danger of injury!
This appliance is very heavy and can tip forwards when the door is open.
Keep the appliance door shut until the appliance has been built in and secured in its housing in accordance with the operating and installation instructions.

Appropriate use

▶ This appliance is intended for use in domestic households and similar residential environments such as
– staff kitchen areas in shops, offices and other working environments
– farm houses and by clients in hotels, motels and other residential type environments
– bed and breakfast type environments
– catering and similar non-retail applications.
This appliance is not intended for use outdoors, in damp environments or in places exposed to rain.

IMPORTANT SAFETY INSTRUCTIONS

▶ This appliance is intended for domestic use only for cooling and storing food and drink.
Any other usage is not supported by the manufacturer and could be dangerous.

▶ This appliance is not suitable for storing and keeping cool medicines, blood plasma, laboratory preparations or other such materials or products. Incorrect use of the appliance for such purposes can cause deterioration of the items stored. The appliance is not suitable for use in areas where there is a risk of explosion.
Miele cannot be held liable for damage resulting from improper or incorrect use of the appliance.

▶ Persons (including children) which lack physical, sensory or mental abilities or experience with the machine should not use it without supervision or instruction by a responsible person.

Safety with children

▶ To reduce the risk of injury, do not allow children to play in, on or near the appliance.

▶ The door hinges can cause injury. Keep children well away at all times.

▶ Ensure that any packing material is disposed of safely and kept out of the reach of children. DANGER of suffocation!

Technical safety

▶ The refrigerant system is tested for leaks. This appliance complies with statutory safety requirements.

▶ To avoid the risk of damage to the appliance, make sure that the connection data (fuse rating, frequency and voltage) on the data plate corresponds to the household supply.
Check that this is the case before connecting the appliance. Consult a qualified electrician if in any doubt.

▶ The electrical safety of the appliance can only be guaranteed when correctly grounded. It is essential that this standard safety requirement is met. If in any doubt please have the electrical installation tested by a qualified electrician.

▶ Reliable and safe operation of this appliance can only be assured if it has been connected to the electricity supply.

▶ The outlet must not be concealed behind the appliance and must be easily accessible so that the appliance can be quickly disconnected from the electrical supply in case of an emergency.

▶ If the power cord is damaged, it must be replaced by a Miele authorized technician in order to protect the user from harm.

▶ The electrical outlet must be properly grounded.

▶ Do not connect the appliance to the electrical supply with a power bar or extension cord. These are a fire hazard and do not guarantee the required safety of the appliance.

▶ If moisture gets into electrical components or into the power cord, it could cause a short circuit. Therefore, do not operate the machine in areas where there may be moisture or splashing water (e.g., garages, laundry rooms).

▶ This appliance must not be installed and operated in mobile installations (e.g. on a ship).

▶ Do not use a damaged appliance. It could be dangerous. Check the appliance for visible signs of damage.

▶ For safety reasons, this appliance may only be used after it has been built in.

▶ During installation, side-by-side heater installation, maintenance and repair work, the appliance must be disconnected from the electrical power supply. It is only completely isolated from the electricity supply when:

– the circuit breaker has been tripped, or

– the screw-type fuses on the electrical service panel have been removed or
– the power cord has been unplugged. Pull on the plug and not on the cord when removing it from the outlet.

▶ Installation, repair, and maintenance work should only be performed by a Miele-authorized service technician.
Work by unqualified persons could be dangerous and may void the warranty.

▶ Any manufacturer's warranty will be void if the appliance is not repaired by a Miele approved service technician.

▶ Defective components should only be replaced by Miele original parts. Only with these parts can the manufacturer guarantee the safety of the appliance.

Correct use

▶ The appliance is designed for use within a certain climate range (ambient temperatures), and should not be used outside this range. The climate range for your appliance is stated on the data plate inside the appliance. Installing it in a room with too low an ambient temperature, e.g. a garage, will lead to the appliance switching off for longer periods so that it cannot maintain the required temperature.

▶ WARNING! DANGER of overheating! Do not cover or block the air vents. This can impair the efficiency of the appliance, increase the power consumption and cause damage to the appliance.

▶ If storing food which contains a lot of fat or oil in the appliance, make sure that it does not come into contact with plastic components as this could cause stress cracks or break the plastic.

▶ Do not store explosive materials in the appliance or any products containing propellants (e.g. spray cans). Electrical components could cause flammable vapors to ignite.
DANGER of fire and explosion.

▶ Do not operate any electrical equipment (e.g. an electric ice cream maker) inside the appliance.
DANGER of sparking and explosion.

▶ Use only genuine original Miele parts. If parts or accessories from other manufacturers are used, the warranty may become invalid.

Stainless steel machines:

▶ Adhesives will damage the coated stainless steel surface and cause it to lose its dirt-repellent protective coating. Do not use sticky notes, transparent adhesive tape, masking tape, or other types of adhesive on the stainless steel surface.

▶ The surface is easily scratched. Even magnets can cause scratching.

Cleaning and maintenance

▶ Do not use any oil or grease on the door seals.
They can cause the seals to deteriorate over time.

▶ Never use a steam cleaner to clean the appliance.
The steam can reach the electrical components and cause a short circuit.

▶ Sharp edged or pointed objects will damage the evaporator, causing irreversible damage to the appliance. Do not use sharp edged or pointed objects to

– remove frost or ice,

– separate frozen foods or remove ice trays.

Transport

▶ To avoid damage to the appliance, always transport it upright and in its packaging.

▶ DANGER of injury and damage. The appliance is very heavy and must be transported by two people.

Disposal of your old appliance

▶ Children could become trapped in the machine and could suffocate.

– Remove the machine doors.

– Remove the drawers.

– Leave the adjustable shelves in the machine so children cannot climb inside.

▶ DANGER of electric shock!

– Cut the plug off the power cord.

– Cut the power cord off the old appliance.

▶ Dispose of them separately from the appliance.

▶ Ensure that the appliance is not stored in the vicinity of gasoline or inflammable gases and liquids during and after disposal.

▶ Make sure that the coolant pipework is not damaged during disposal to avoid uncontrolled leakage of oil and coolant (see data plate for coolant type).

▶ Splashes of coolant can cause damage to the eyes. Be careful not to damage any part of the pipework while awaiting disposal, e.g. by

– puncturing the coolant channels in the evaporator,

– kinking any pipework,

– scratching the surface coating.

Disposal of packaging material

The packaging is designed to protect the appliance from damage during transportation. The packaging materials used are selected from materials which are environmentally friendly for disposal and should be recycled.

Ensure that any plastic wrappings, bags, etc. are disposed of safely and kept out of the reach of children. Return the packaging to your dealer.

Disposal of your old appliance

Electrical and electronic appliances contain valuable materials. They also contain certain substances, compounds and components which were essential for the proper functioning and safe use of the equipment. Handling these materials improperly by disposing of them in your household waste can be harmful to your health and the environment. Therefore, please do not dispose of your old appliance with regular household waste and follow local regulations on proper disposal.

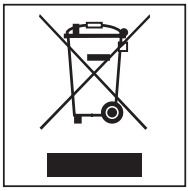

Consult with local authorities, dealers or Miele in order to dispose of and recycle electrical and electronic appliances. Miele assumes no responsibility for deleting any personal data left on the appliance being disposed.

Take care not to damage the pipework at the back of your appliance before or during transportation to an authorized, environmentally friendly collection depot.
This way, coolant in the pipework and oil in the compressor will be contained, and will not leak into the environment.

Please ensure that your old appliance does not pose a danger to children while being stored prior to disposal. See “IMPORTANT SAFETY INSTRUCTIONS” for more information.

Installation information

⚠ Risk of injury and damage.
This appliance must be built in, otherwise it could tip over.
Keep the appliance door(s) shut until the appliance has been built in and secured in its housing in accordance with the operating and installation instructions.

⚠ Fire hazard and risk of damage.
The appliance must not be installed underneath a cooktop.

Installation location

This appliance should be installed in a dry, well-ventilated room.

When deciding where to install your appliance, please bear in mind that the energy consumption will increase if installed near to a heater, a cooker, or other appliance that gives off heat. Direct sunlight should also be avoided. The higher the room temperature, the longer the compressor has to run and the higher the energy consumption is.

When installing the appliance, please note:

– The electrical outlet must be easily accessible in an emergency and not concealed behind the appliance.
– The plug and power cord must not touch the back of the appliance as they could be damaged by vibrations from the appliance.
– Do not plug other appliances into electrical outlets behind this appliance.

If installation near a heat source is unavoidable, observe the following minimum distances between the appliance and the heat source:

– At least 1 1/4" (3 cm) to electric or gas stoves
– At least 11 3/4" (30 cm) to oil or coal-based stoves

If it is not possible to observe these minimum distances, an insulation plate must be installed between the appliance and the heat source.

Climate class

The appliance is designed for use within a certain climate range (ambient temperatures) and should not be used outside this range. The climate range of the appliance is stated on the data plate inside the appliance.

Climate class	Room temperature
SN	50°F to 90°F / 10°C to 32°C
N	60°F to 90°F / 16°C to 32°C
ST	60°F to 100°F / 16°C to 38°C
T	60°F to 109°F / 16°C to 43°C

Operating in a room which is too cold will cause the compressor to turn off for too long, causing the internal temperature in the appliance to rise, resulting in damage.

⚠ Risk of damage.
In environments with high humidity, condensation may appear on the external surfaces of the appliance. This condensate can cause corrosion on external appliance panels.
To prevent this, it is advisable to install the appliance in a dry and/or air-conditioned room with sufficient ventilation.
After installation, make sure that the appliance door closes properly, that the specified ventilation gaps are adhered to, and that the appliance is installed in accordance with these installation instructions.

Installation notes

Load-bearing capacity of the niche floor

The floor of the space where the appliance is to be installed must be flat and level.

It must be made from strong, rigid material.

The appliance is extremely heavy when fully loaded, and the floor it stands on must be able to bear its weight. If necessary, seek the advice of an architect or structural engineer.

When fully loaded, the weight of the appliance is about:

K 2601 SF	776 lbs (352 kg)
K 2801 SF, K 2811 SF	899 lbs (408 kg)
K 2901 SF, K 2911 SF	1042 lbs (473 kg)

Door hinging

The appliance is supplied with a fixed hinge. If you need to change the door hinging to the other side, please contact the Miele Technical Service.
On no account should you attempt to change the door hinging yourself.

Adjoining cabinetry/units

The appliance is screwed to the adjoining cabinetry/units to the side and above. For this reason, it is essential that all cabinets/units are fixed to the ground and/or wall.

Installation information

Ventilation

⚠ WARNING! Risk of fire!
Operation of the appliance is limited. Keep the required ventilation gaps free from obstruction.

Noncompliance with the specified dimensions for the ventilation grille will cause the compressor to turn on more often and run for longer periods.
This causes increased energy consumption and an increased compressor operating temperature, which can result in damage to the compressor.
Do not block the ventilation gaps. They must also be cleaned on a regular basis to remove dust.

Side-by-side

This appliance can be installed side-by-side with another refrigeration appliance. The following overview will show you which side-by-side options you have with your appliance:

A side-by-side merging kit and a top frame (KTF) are required for this. Both are available from your Miele dealer or Miele Technical Service.

Instructions for installing appliances side-by-side can be found in the side-by-side merging kit instruction manual.

... with partition wall

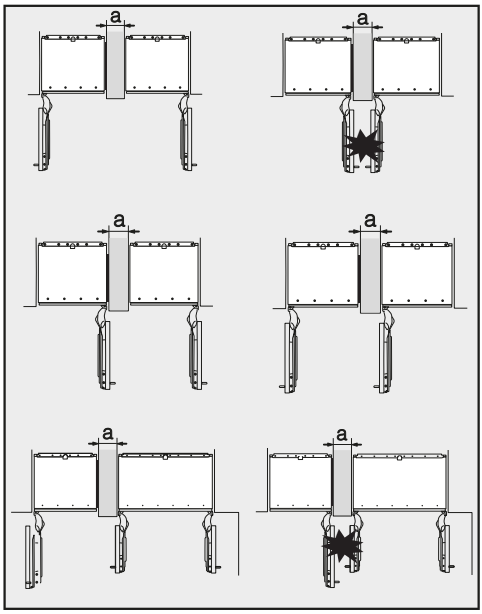

The wall **a** between the side-by-side appliances must be **at least 5/8" (16 mm)** thick.

The appliances are secured individually in their niche using the supplied installation material.

If the partition wall **a** is **narrower than 6 5/16" (160 mm)**, you will need the side panel heater from the side-by-side installation kit to prevent condensation from forming and any resulting damage.

If the partition wall **a** is **thicker than 6 5/16" (160 mm)**, you do not need the side-by-side installation kit, nor the side panel heater.

. . . without partition wall

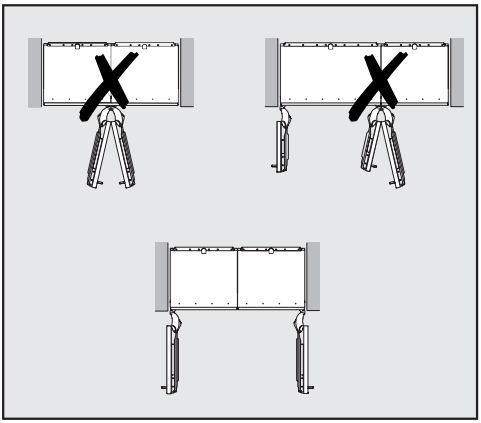

If the appliances are to be installed next to each other without a partition wall between them, they will need to be joined together with the side-by-side installation kit. In addition, you must install the side panel heater to prevent condensation from forming and any resulting damage.

Installation dimensions

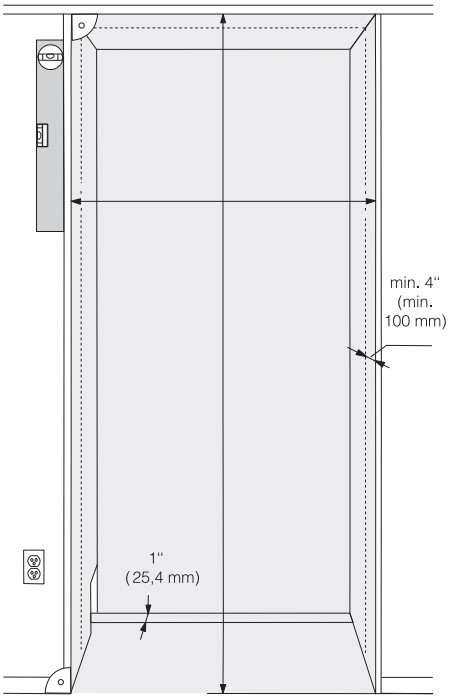

– The electrical connection must not be positioned higher than 9" (228.6 mm) above the floor.

The electrical outlet must not be concealed behind the appliance and must be easily accessible in an emergency.

K 2601 SF

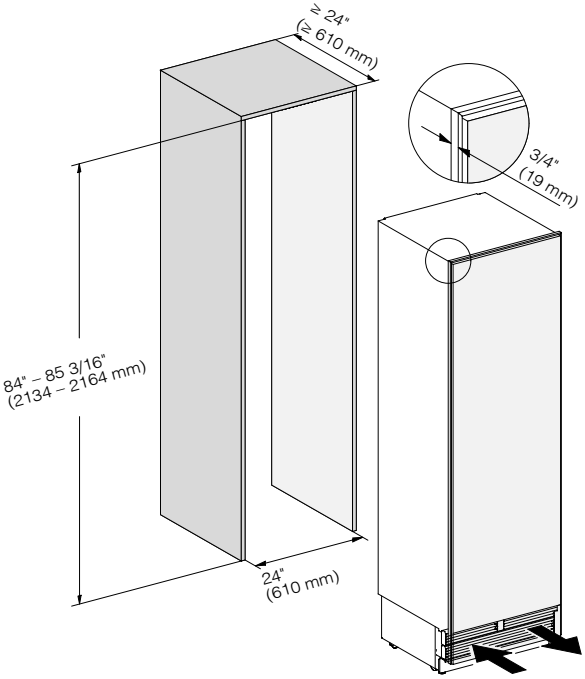

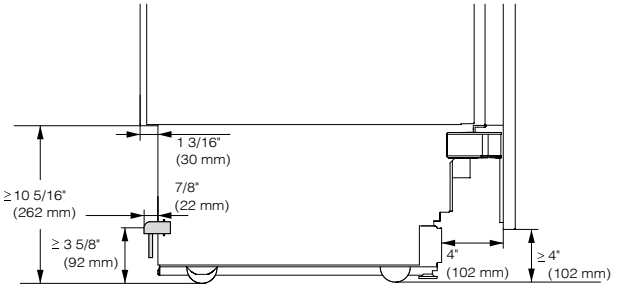

side view

Installation dimensions

K 2801 SF, K 2811 SF

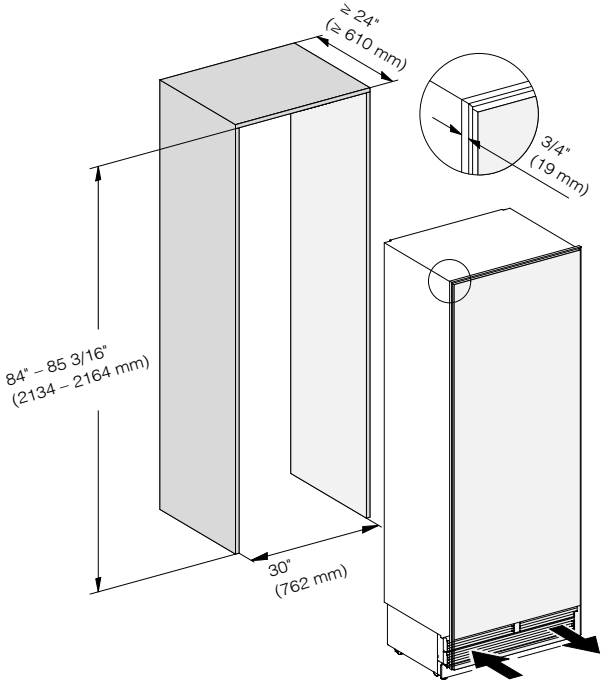

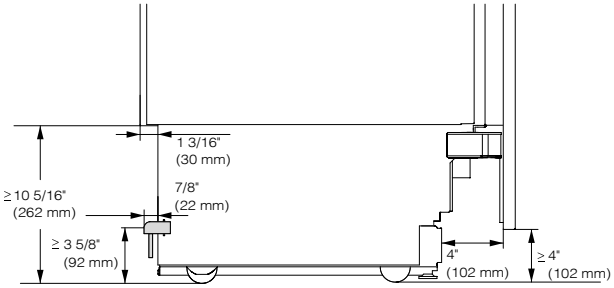

side view

K 2901 SF, K 2911 SF

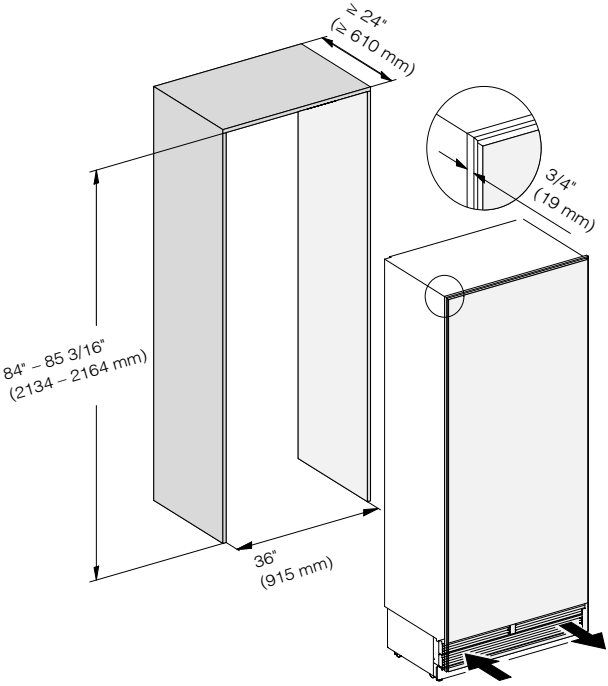

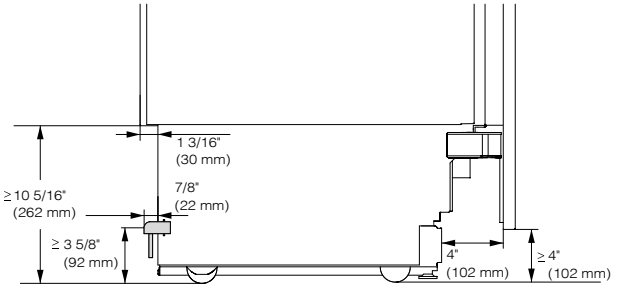

side view

Installation dimensions

Dimensions when the appliance door is open (opening angle 90°)

K 2601 SF

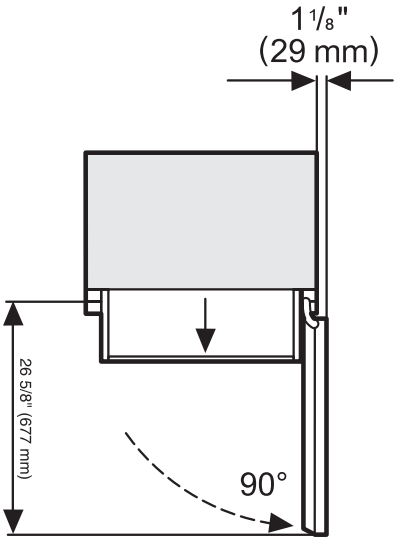

K 2801 SF, K 2811 SF

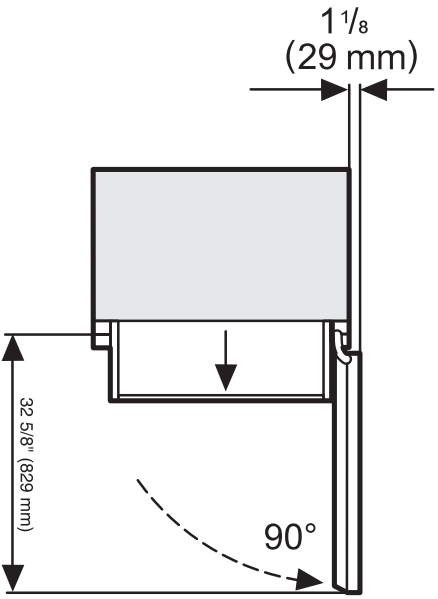

Installation dimensions

K 2901 SF, K 2911 SF

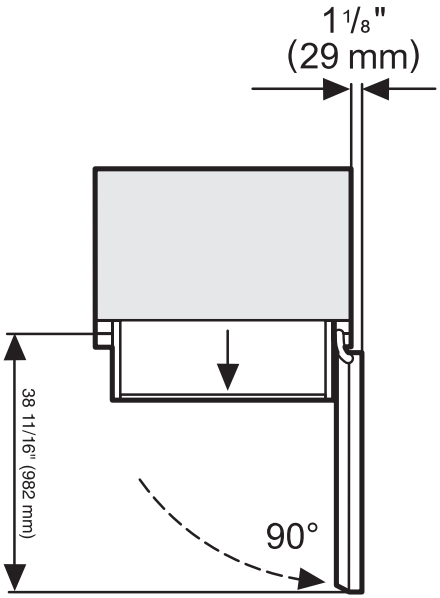

Dimensions when the appliance door is open (opening angle 115°)

K 2601 SF

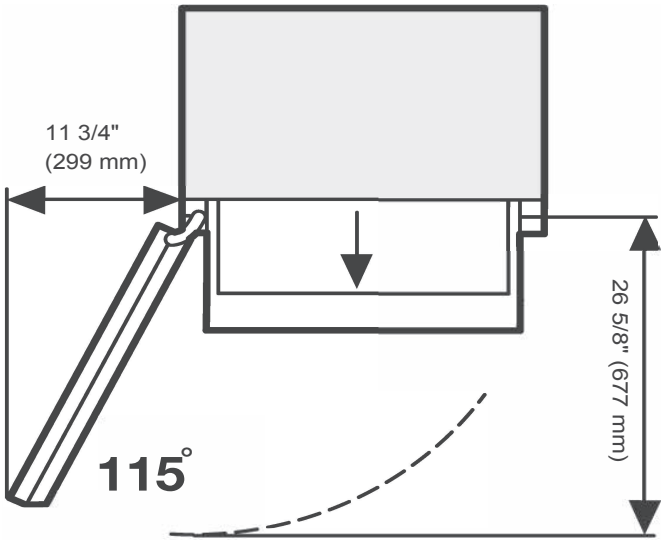

Installation dimensions

K 2801 SF, K 2811 SF

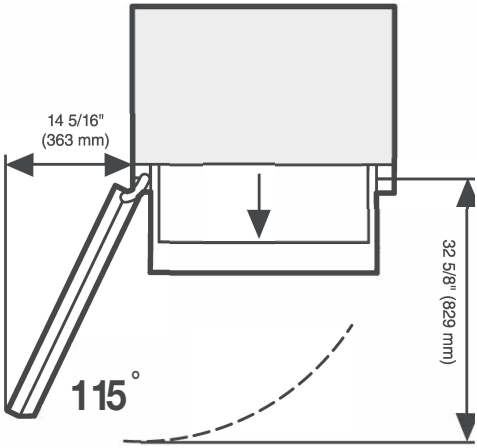

K 2901 SF, K 2911 SF

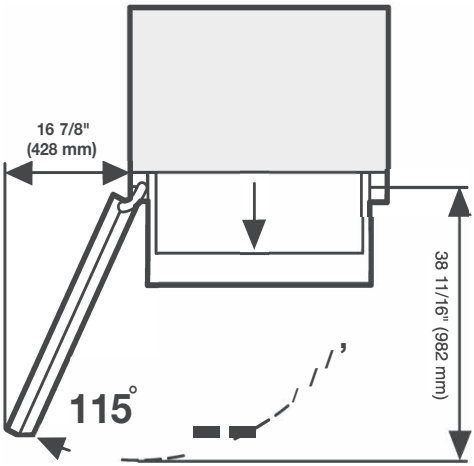

Before starting...

It is essential to read these installation instructions carefully before starting to install the appliance.

The appliance should be installed by a suitably qualified tradesman in accordance with these installation instructions. Safe operation of the appliance is only assured if it has been installed and connected in accordance with the installation instructions.

⚠ Risk of damage and injury!

This appliance is very heavy and can tip forwards when the door is open.

Keep the appliance door shut until the appliance has been built in and secured in its housing in accordance with the operating and installation instructions.

The appliance is both large and heavy. Installation must be carried out by two people.

The appliance must be installed in accordance with local regulations. If local regulations are not available, the following regulations must be observed:

– in the USA: the National Electric Code, ANSI/NFPA 70 - latest edition/ State and Municipal codes and/or local codes.

– in Canada: the Canadian Electric code C22.1 - latest edition/Provincial and Municipal codes and/or local codes.

Tools required

– Cordless drill

– TX 20 screwdriver

– Hammer drill

– Drill bits in various sizes, depending on materials

– Hammer

– Open-ended wrench

– Ratchet wrench, attachment: socket, 5/16" (8 mm)

– Adhesive tape

– Utility knife

– Pipe wrench

– Level

– Tape measure

– Pencil

Other

– Step ladder

– Hand truck

Aligning the installation niche

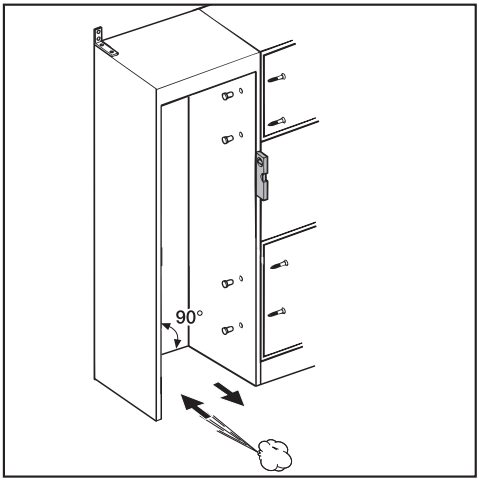

The installation niche must be carefully aligned using a level before installing the appliance. The niche corners must be at 90° angles to each other, otherwise the cabinet door will not sit straight on all four corners.

– The side panels of the installation niche must be even.

– The surrounding walls of the installation niche must be at least 5/8” (16 mm) thick.

– The surrounding walls must be securely fixed to the floor or wall.

– The shortened side walls must be at least 4" (100 mm) thick.

– The baseboard must be at least 1/2” (13 mm) thick (preferably 3/4” (19 mm)).

Checking the installation niche

- Check the installation dimensions.
- Check the position of the electrical connections (see “Electrical connection”).
- Check that all adjacent cabinets/units are securely fixed to the wall. All adjacent cabinets/units must be securely fixed to the wall.
- Check the adjacent cabinets/units for possible collisions when opening doors (door opening angle).

Before installation

⚠ Heavy weight!
This appliance is very heavy and can tip forwards when the door is open.

- Before installation, remove any accessories from the back of the appliance.
- Check the appliance for damage during transportation.

Do not install a damaged appliance.

- Check that all parts at the back of the appliance are unhindered.
- To protect the floor when installing the appliance, secure an off-cut of flooring or similar material to the floor in front of the installation area.

⚠ Risk of tipping over!
Make sure the appliance is no longer secured to the pallet as soon as you unscrew the brackets that fix the appliance to the pallet.

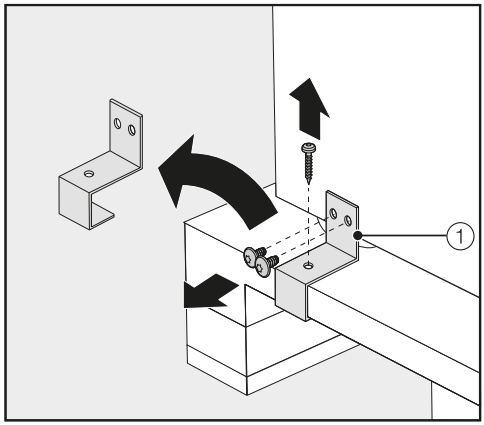

- Unscrew the brackets ①.
- With the help of several people as required, carefully lift the appliance from the pallet, starting with the back of the appliance.

As soon as you have set the appliance upright, you can move it using the rollers on the bottom.

Preparing the installation niche

⚠ Keep the appliance door closed until the appliance is secured inside the niche.

⚠ Risk of tipping over!
The installation niche must be fixed to the wall behind it with several screws. Only this can ensure that the appliance will not tip over after being installed.
Always use the provided anti-tip brackets to secure the niche.

Due to the sheer size and weight of the appliance, it needs to be ensured that it cannot tip forwards once it is built into the niche.

Using the installation equipment

Parts required for installation of the appliance are supplied with the appliance. The plastic bags supplied are marked with letters for easy identification.

- When performing the individual assembly steps, observe the letters specified and use the matching plastic bag with the required installation equipment.

Securing the installation niche

The provided anti-tip brackets ② ensure the installation niche is securely fixed to the wall.

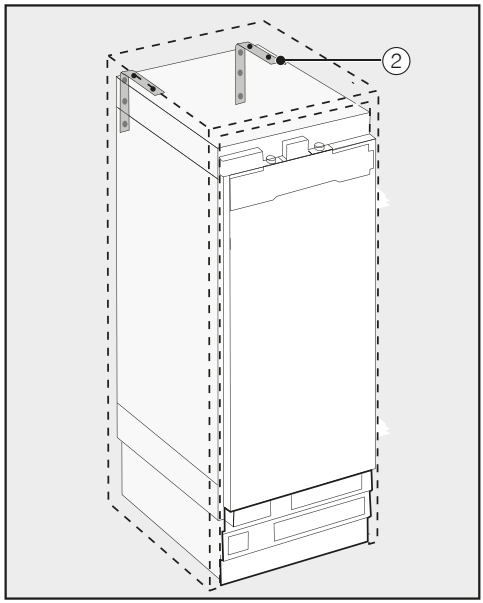

- Use 2 anti-tip brackets ② for each individual appliance or 4 anti-tip brackets for each (side-by-side) combination of appliances.
- Position the anti-tip brackets ② on the left and right of the niche.

Building in the appliance

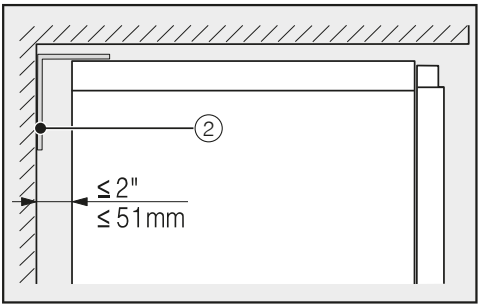

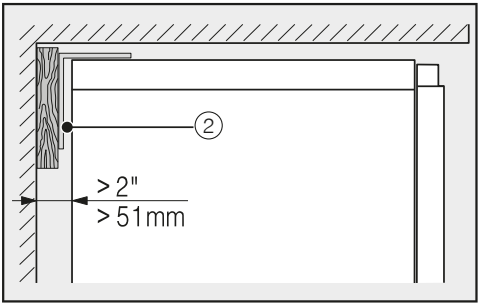

- Make sure that the gap between the appliance's rear wall and the installation niche does not exceed 2" (51 mm).
- Place a wooden wedge behind the anti-tip brackets ② if necessary.
- While holding the anti-tip brackets in place, mark the necessary drill holes on the rear wall of the installation niche.

B

Fixing screws for different uses and types of material are supplied in the accompanying pack:

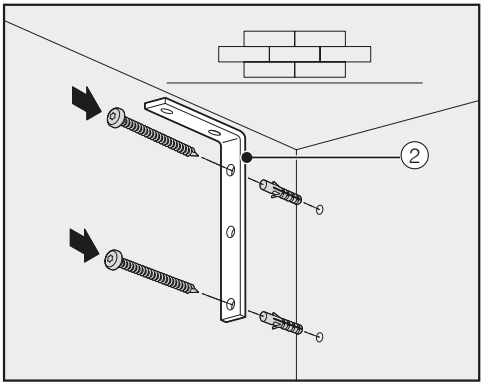

Securing to concrete wall

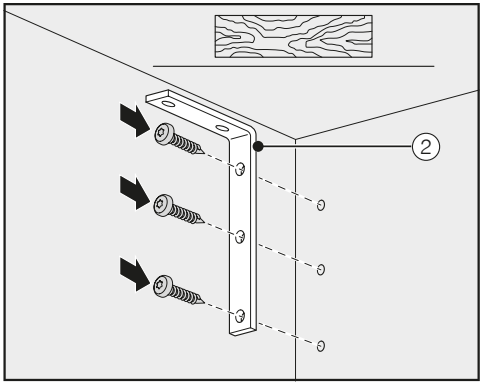

Securing to a wooden wall

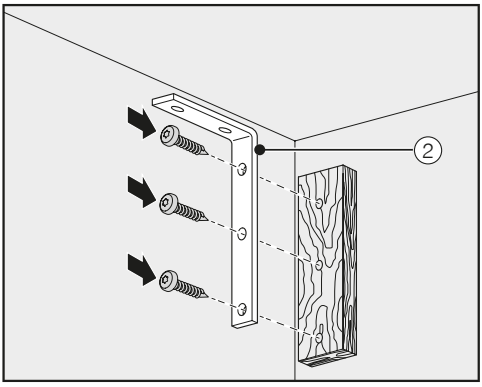

Securing with a wooden wedge

■ Secure the installation niche to the wall using the anti-tip brackets ②.

Pushing the appliance into the niche

Then push the appliance into the niche, taking care not to damage the electrical connection!

If you are installing several appliances side by side, now secure the appliances to one another (see the instructions for the side-by-side installation kit).

■ Remove the baseboard ③ from the appliance base as follows:

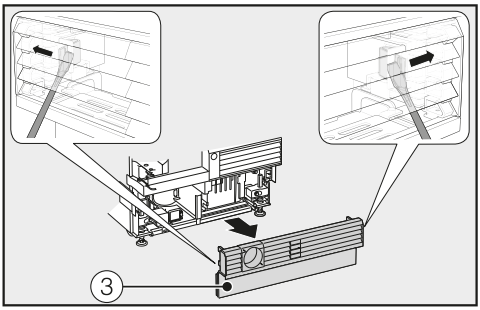

■ Carefully guide a flat-head screwdriver through the grate in the baseboard ③ on both sides and use it to push the internal plastic latches outwards to release the baseboard.

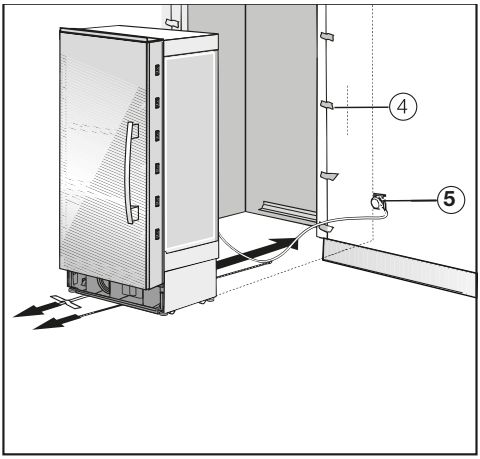

- Affix edge protection ④ to the adjacent cabinet fronts.
- Insert the plug connector at the back of the appliance (see “Electrical connection”).
- Insert the plug ⑤ into the electrical socket.

The electrical outletshould be close to the appliance and easily accessible.
Otherwise, it must be possible to switch the appliance on and off using an external all-pole switch with a sufficient contact gap.

⚠ Risk of short circuit and overloading!
When installing appliances side by side, each appliance must have its own separate outlet.

Tip: To secure the power cord to prevent it becoming caught:
Tie a piece of string to the middle of the cord and as the appliance is being pushed into the niche, pull the cord forward underneath the appliance .

- Carefully push the appliance into the niche.
- If the appliance cannot be pushed into the niche (because the floor is uneven, for example), unscrew the rear feet slightly (see “Aligning the appliance”) and slide the appliance into the niche.
- Remove the edge protection ④ from the adjacent cabinet fronts.

Aligning the appliance

- Align the appliance with neighboring cabinet fronts.

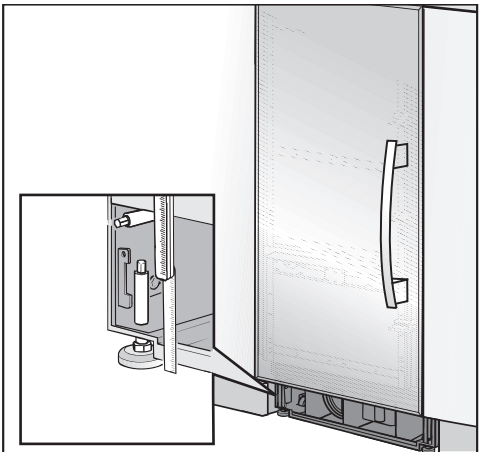

The adjustable feet at the front and back of the appliance can all be adjusted from the front.

⚠ Risk of damage!
Do not **under any circumstances** use a cordless screwdriver to adjust the front and rear feet.

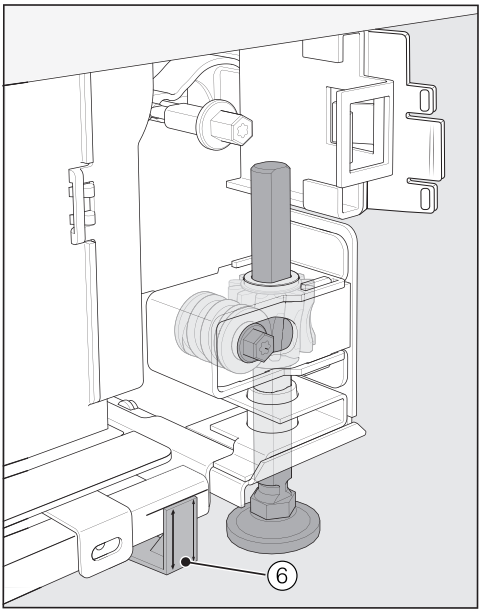

- Position the supplied spacers ⑥ on both sides on the markings next to the adjustable feet at the front of the appliance.

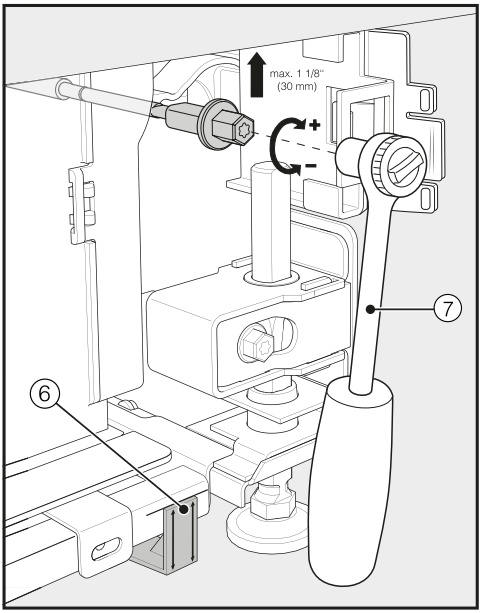

■ Adjust the rear feet ⑦ with a ratchet (attachment: 5/16" (8 mm) socket) or a TX 20 screwdriver.

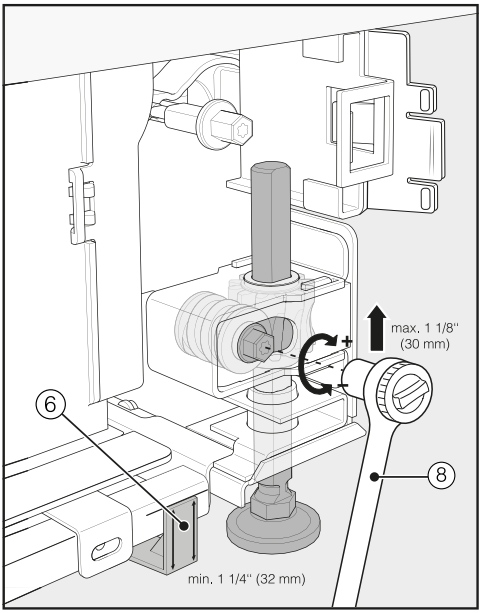

■ Adjust the front feet ⑧ with a ratchet (attachment: 5/16" (8 mm) socket) or a TX 20 screwdriver.

Tip: Proceed carefully when adjusting the feet, alternating between the left and right feet.

■ Unscrew the feet ⑦ and ⑧ on both sides at least until the marking on the base is aligned with the required 1 1/4" (32 mm) on the spacer ⑥. The standard dimension of 1 1/4" (32 mm) relates to a niche height of 84" (2134 mm).

It is important to align the feet to a height of at least 1 1/4" (32 mm) so that the appliance's ventilation works properly via the base.

⚠ Risk of damage!
Unscrew the feet **only until** the marking on the base is aligned to a maximum of 2 7/16" (62 mm) (max. niche height of 85 3/16" (2164 mm)). Otherwise the rear foot adjustment will be damaged.

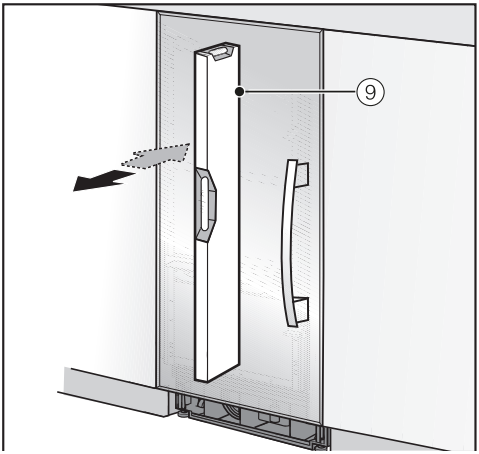

■ Use a level ⑨ to check the alignment of the appliance.

Securing the appliance in the niche

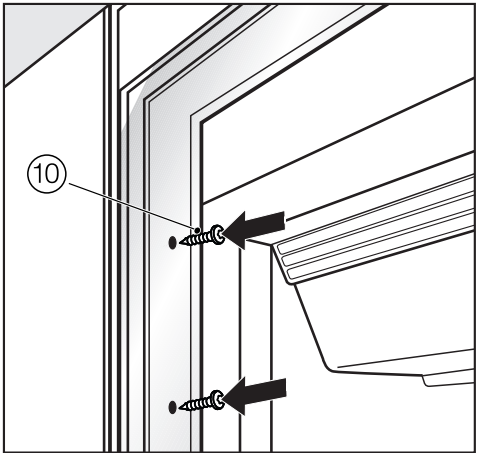

■ Use the screws supplied ⑩ to secure the refrigeration appliance on both sides.

In a side-by-side combination, only the external panels of the two appliances can be secured to the cabinet wall.

Securing the base cover plate and the baseboard

Do not cover the vents in the base. This will damage the appliance!

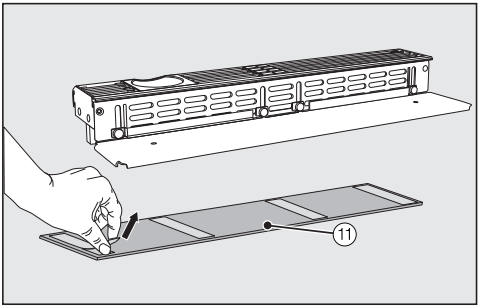

■ Remove the film from the base cover plate ⑪.

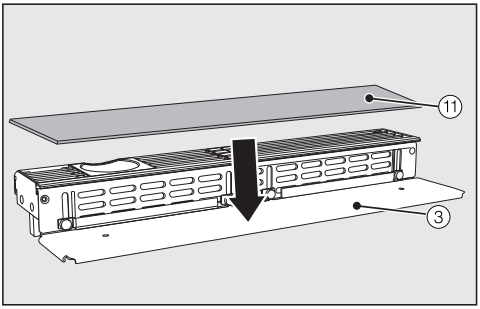

■ Secure the base cover plate ⑪ to the baseboard ③.

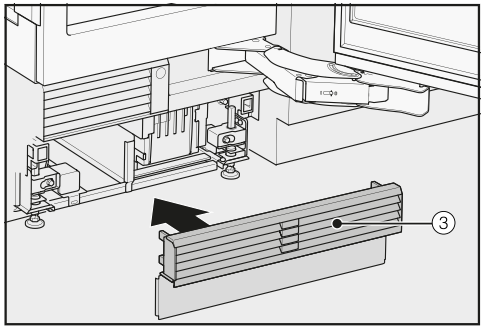

■ Click the baseboard ③ onto the bottom of the appliance base.

⚠ Risk of electric shock!
The appliance must only be switched on when it has been installed in accordance with the installation instructions.
Ground the appliance.
The appliance must not be grounded via a gas pipe.
If in doubt, have a suitably qualified and experienced electrician check that the installation complies with relevant regulations.
Do not install a fuse into neutral current or grounding electrical circuit.
Do not use extension cords or ungrounded (two prong) adapters.
Do not use a frayed or damaged power cord.

⚠ Risk of electric shock!
For protection against electric shock, this appliance is equipped with a pole-free plug which is protected against reverse polarity. The electrical outlet must be properly grounded.
Do not remove the round grounding connector pin from the plug.
Use only a grounded plug adapter.

Wait for 1 hour after installation before plugging the appliance into the power supply. This allows coolant and refrigerator oil to settle in accordance with regulations.

Ensure that the voltage of the power supply corresponds with the connection voltage of the appliance. A power supply of 110–120 V, 60 Hz and 10–16 Amp, which is protected by a power switch or a fuse, is required to operate the appliance.

The manufacturer recommends operating the appliance on a dedicated circuit to avoid overloading the electrical circuit.

All relevant legal electrical, fire, and building regulations must be observed when installing the electrical outlet and/or the appliance.

In certain countries, appliances are required to be connected to the electrical supply via a wall-mounted ON/OFF switch.

To avoid the risk of fire, electric shock, or other injuries, the appliance must be installed and connected by a suitably qualified electrician in accordance with all relevant local and national regulations and standards, including fire prevention.

The socket must not be concealed behind the appliance and must be easily accessible so that the appliance can be quickly disconnected from the electrical supply in case of an emergency.

If the outlet is no longer accessible after installation, an additional means of disconnection must be provided for all poles. Suitable means of disconnection include switches with an all-pole disconnect device with a contact opening of at least 1/8" (3 mm). These can be circuit breakers, fuses, and relays.

The plug and power cord must not come into contact with the back of the appliance as vibrations can cause damage to these components. This could result in a short circuit.

Do not plug other appliances into electrical outlet behind this appliance.

Do not connect the appliance to a stand-alone inverter such as those used with an autonomous energy source e.g., **solar power**.
When the appliance is turned on, power surges could result in a safety switch-off. This can damage the electronics. The appliance must not be used with so-called **energy saving devices** either. These reduce the amount of energy supplied to the appliance, causing it to overheat.

If the power cord needs to be replaced, this must be performed by a qualified technician.

Connecting the appliance

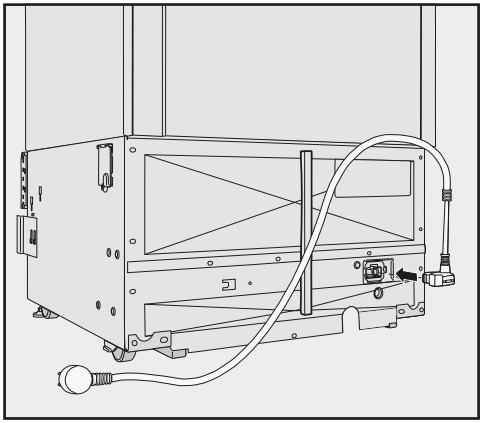

- Insert the plug into the back of the appliance.

Make sure that the plug has clicked into position correctly.

- Insert the plug into the electrical outlet and switch on.

The appliance is now connected to the electricity supply:

Follow the steps described in “Switching the appliance on and off”, section “Switching on the appliance”.

	Normal energy consumption	Increased energy consumption
Installation / Maintenance	In a well-ventilated room.	In an enclosed, poorly ventilated room.
	Protected from direct sunlight.	In direct sunlight.
	Away from heat sources (radiator, range/oven).	Near a heat source (radiator, oven).
	Where the ideal room temperature is approx. 68°F (20°C).	Where the ambient room temperature is above 77°F (25°C).
	Air vents uncovered and dusted regularly.	Where the ventilation openings are blocked and full of dust.
Temperature setting	39°F to 41°F (4°C to 5°C) in the refrigerator section	The lower the temperature in the appliance, the higher the energy consumption.
	SmartFresh drawer close to 32 °F (0 °C)	

How to save energy

	Normal energy consumption	Increased energy consumption
Use	The drawers, and shelves are arranged as they were when the appliance was delivered.	
	Only open the door when necessary and for as short a time as possible. Store food in an organized way.	Frequent opening of the door for long periods will cause a loss of coldness. The appliance will try to cool down and the compressor will run for longer periods.
	When shopping, use a cooler bag and place the food in the appliance as soon as possible. Replace any food removed as quickly as possible, before it warms up too much. Allow hot food and drinks to cool down before placing them in the appliance.	Hot food or food at room temperature raises the temperature inside the refrigeration appliance. The appliance will try to cool down and the compressor will run for longer periods.
	Store food well packaged or covered.	The evaporation or condensation of liquids in the refrigerator section will cause a loss of coldness.
	Place frozen food in the refrigerator section to defrost.	
	Do not overfill the appliance in order to allow the air to circulate.	Poor air circulation will cause a loss of coldness.

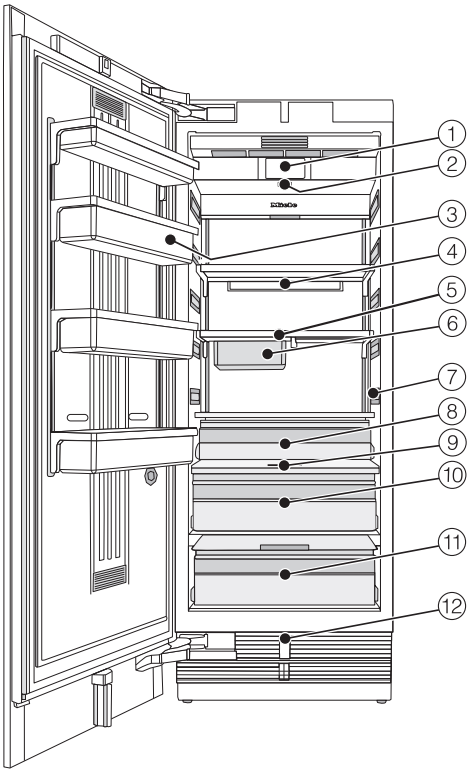

① Display

② On/Off switch

③ Door shelves in the appliance door

④ Holder for the Active AirClean filter

⑤ Shelves

⑥ Hanging drawer

⑦ Interior lighting

⑧ Fruit and vegetable drawer

⑨ Moisture regulator

⑩ Humidity-controlled compartment with moisture regulator for fruit and vegetables

⑪ Dry compartment with temperature adjustment for food which goes off quickly

⑫ Automatic door opening

The dry compartment in the SmartFresh zone fulfills the requirements of a cold storage compartment according to EN ISO 15502.

Main screen

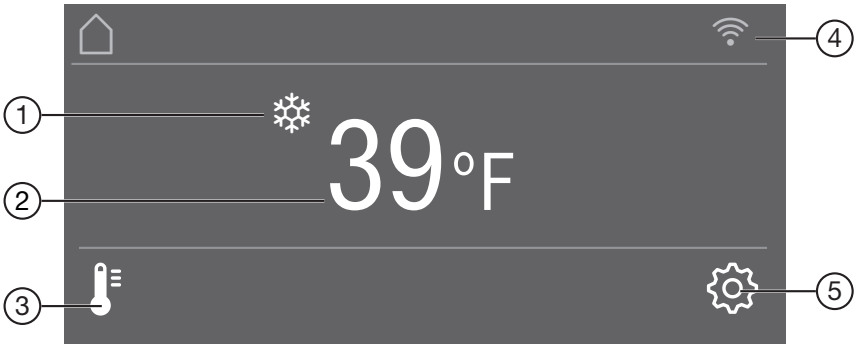

① Automatic SuperCool display
(only visible when the Automatic SuperCool function has been switched on)

② Temperature display (target temperature)

③ Sensor control
for setting the temperature

④ Display for Miele@home connection status
(only visible when Miele@home has been set up)

⑤ Sensor control
for adjusting various settings in settings mode

Settings mode

The following icons can be selected in settings mode:

Symbol		Function
	Language	Set
	Display Brightness	Adjust (darker to brighter)
	Color Scheme	Set (dark or bright)
	Buzzer Tones	Adjust the volume or switch off the Buzzer Tones completely (e.g., for the door alarm)
	Keypad Tone	Adjust the volume or switch off the Keypad Tone completely
°F/° C	Temperature Unit	Set (°Fahrenheit or ° Celsius)
	Keypad Lock	Switch on or off (see “Selecting additional settings”)
	MasterFresh	Adjust the temperature in the dry compartment (see “Selecting additional settings”)
	Eco Mode	Switch on or off (see “Selecting additional settings”)
	Self Test	The system restarts and is checked for faults or malfunctions (see “Selecting additional settings”)
	Door Assistant	Switch on (Push2Open or Pull2Open) or switch off (see “Selecting additional settings”)
	Miele@home	Set up, deactivate, or query WLAN connection status (see “Selecting additional settings”)
*	Demo Mode	Switch off * (only visible when Demo Mode, is switched on see “Selecting additional settings”)
	Factory Default	Reset to default settings (see “Selecting additional settings”)
	Sabbath Mode	Switch on or off (see “Selecting additional settings”)

	Display Active Air-Clean Filter	Switch on or off or reset (see “Selecting additional settings”)

Symbols in settings mode

</>	Scroll in settings mode or select a setting
−/+	Change a setting (e.g., display brightness)
OK	Confirm a setting
⮌	Exit the menu level

Accessories supplied

Appliance plug

Labels for the SmartFresh zone

Each type of food has its own characteristics which determine the specific storage conditions it requires.

Dry compartment label

Humidity-controlled compartment label

The labels for the two compartments in the SmartFresh zone help you to choose the right type of food to ensure ideal storage conditions.

Stick the labels onto the compartments in the SmartFresh zone as described under “Before first use” in “Initial commissioning”.

Active AirClean filters

This Active AirClean filters neutralize unpleasant odors in the refrigerator section for optimal air quality.

The holder for the Active AirClean filters is in the refrigerator section. Insert the Active AirClean filters supplied as described under “Inserting the Active AirClean filters” in “Initial commissioning”.

We recommend replacing the Active AirClean filters every 6 months.

Stainless steel front panels

Stainless steel front panels in stainless steel-look give your appliance a high-quality appearance.

Optional accessories

A range of useful Miele accessories and care products are available for your appliance.

Active AirClean filters

See “Accessories supplied” for a description.

Side-by-side merging kit and top frame (KTF)

For installing two or more appliances next to each other.

Hinge pockets

The hinge pockets can be used to change the door hinging on the appliance.

The door hinging must only be replaced by Miele Technical Service.

Accessories are available to order via the Miele Webstore, from Miele directly (see back cover for contact details) or from your Miele dealer.

Before first use

Allow the appliance to stand for approx. 1 hour prior to connecting it to the power supply.
This will help prevent any malfunctions.

Packaging material

- Remove all packaging material from the inside of the appliance.

Leftover tape residue.
Always remove all packaging material, including adhesive tape, **before** switching on the appliance.

Cleaning

Please refer to the relevant instructions in “Cleaning and care”.

- Clean the inside of the appliance and the accessories.

Sticking on the SmartFresh zone labels

The labels supplied for the two compartments in the SmartFresh zone help you to choose the right type of food to ensure ideal storage conditions.

Please note that the refrigeration appliance must be switched off when sticking on the labels, as the labels will not adhere to a cold surface. Furthermore, there should not be any dust or grease on the surface.

- Stick the labels on as described below:

– Humidity-controlled compartment for fruit and vegetables

- Remove the label from the foil and stick it onto the frame of the humidity-controlled compartment (see “Product description”).

– Dry compartment for food which goes off quickly

- Remove the label from the foil and stick it onto the frame of the dry compartment (see “Product description”).

Tip: If you are not satisfied with the positioning of the labels, you can easily pull them off and stick them on again. In addition, they can be removed without leaving any residue.

Inserting the Active AirClean filters

Your refrigeration appliance is equipped with 2 Active AirClean filters which neutralize unpleasant odors in the Fridge Zone.

The holder for the Active AirClean filters is located under each of the shelves in the Fridge Zone.

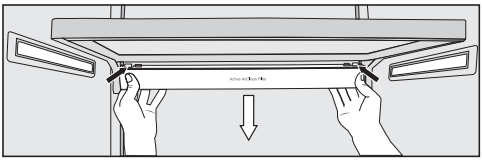

- To remove the holder for the Active AirClean filters, press against the retainers on both sides of the holder from the rear and pull the holder downwards diagonally from the shelf.

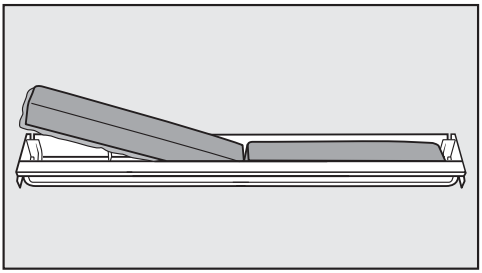

- Insert the two Active AirClean filters supplied with the surrounding edge pointing downwards into the holder.
- To replace the holder, press against the retainers on both sides from the rear and, using the retainers, clamp it into the gap on the shelf from below.

Using the appliance

The touch display can be scratched by pointed or sharp objects, e.g., pens.
Only touch the display with your fingers.
If your fingers are cold, the touch display may not react.

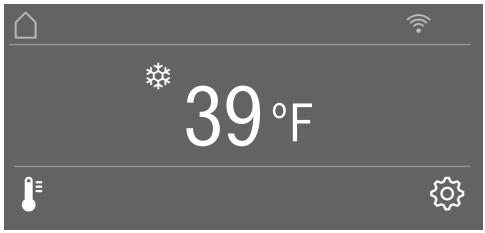

The symbols underneath the temperature display can be **selected** directly by touch; the symbols and text in or above the temperature display can only be **displayed**.

... in settings mode ⚙

- Touch the symbol ⚙ to open settings mode.
- Use the arrow buttons < and > to select the function whose settings you wish to adjust.
- Confirm your selection with *OK*.
- Adjust the settings using either the arrow buttons < and > or sensors + and −.
- Confirm your selection with *OK*.

The setting with the **colored** background is always the **selected** setting; it can be confirmed directly with *OK*.

■ Select ⮌ if you wish to switch to the previous menu level or terminate the process.

Every touch of the display is confirmed with an audible keypad tone. You can switch off this keypad tone in settings mode ⚙.

Starting up for the first time

■ Open the appliance door.

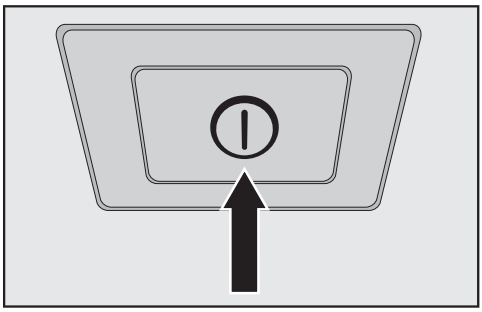

■ Turn the appliance on by pressing the On/Off switch.

The appliance will start to cool and the interior lighting will come on when the appliance door is opened.

Miele will then appear in the appliance display.

■ When you turn the appliance on for the first time, you will be asked to make following settings:

– Set the Language

(if you accidentally select the wrong Language, return to settings mode ⚙ and use the symbol ⚑ to change the language),

– Set Temperature Unit: °C (degrees Celsius) or °F (degrees Fahrenheit),

– Set up Miele@home:

■ Select Continue if you wish to set up Miele@home now (to do this, following the instructions under “Selecting additional settings”, section “Set up Miele@home”).

■ Select Skip if you would prefer to set up Miele@home later.

■ Use the < and > arrow buttons to select the correct setting and touch *OK* to confirm your selection.

■ Select ⮌ if you want to return to the previous menu level.

Set-up Successfully Completed appears in the display.

■ Confirm the first use with *OK*.

Your appliance has been successfully set up and is ready for use.

The main screen appears on the display.

You cannot terminate the initial start-up process. The only way to terminate the process is to switch off the appliance, though the process will continue when the appliance is switched back on.

Switching on the appliance

- Open the appliance door.

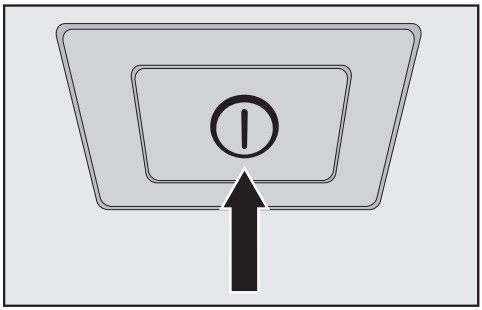

- Turn the appliance on by pressing the On/Off switch.

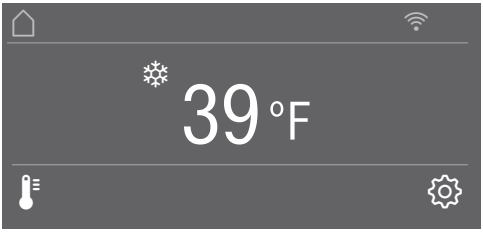

The refrigeration appliance will start to cool and the interior lighting will come on when the appliance door is opened.

Miele will then appear on the main screen in the appliance display.

To enable the temperature to get sufficiently cold inside the appliance, allow the appliance to run for a few hours before placing food in it.

Switching off the appliance

- Turn the appliance off by pressing the On/Off switch.

The cooling and interior lighting are switched off.

Please note: The appliance is not disconnected from the power supply when the On/Off switch is in the “Off” position!

Turning off for longer periods of time

If the appliance is not going to be used for a longer period of time, e.g. while on vacation:

- turn the appliance off,
- unplug the appliance or trip the circuit breaker,
- clean the appliance,
- leave the door ajar to air the appliance and avoid odors building up inside the appliance.

If, during a long absence, the appliance is switched off but not cleaned and the door is left shut, there is a danger of bacteria building up inside the appliance.

In settings mode ⚙, certain settings can be adjusted and functions selected, allowing you to adjust the machine to suit your requirements.

The following section only describe the functions in settings mode ⚙ that require further explanation.

The door alarm and other warnings are automatically disabled when the appliance is in settings mode ⚙.

Switching Keypad Lock on or off 🔒/🔓

Switch on Keypad Lock if you wish to protect your appliance from unwanted temperature changes or other unintentional adjustments in settings mode ⚙.

- In settings mode ⚙, use the < and > arrow buttons to select Keypad Lock and touch *OK* to confirm your selection.
- Use the arrow buttons < and > to switch the keypad lock On or Off and confirm your selection with *OK*.
- The keypad lock will not be activated until you close the appliance door.

Nothing will appear in the display to indicate that the keypad lock is switched on.

The message Press OK for 6 seconds to unlock will appear in the display if you select a sensor control while the keypad lock 🔒 is switched on.

- Follow the instructions on the display.

The display is unlocked briefly so you can adjust the settings as required. Closing the appliance door will reactivate the keypad lock.

Adjusting the temperature in the SmartFresh zone (dry compartment) 🌡↕

- In settings mode ⚙, use the < and > arrow buttons to select MasterFresh and select *OK* to confirm your selection.
- Use the − and + sensors to select the desired temperature and touch *OK* to confirm your selection.
- Touch the sensor ⮌ if you wish to terminate the process.

The segment bar displays 5 segments; the temperature is adjusted in increments of approx. 1°.

The factory default setting for the temperature in the dry compartment is 32°F (0°C).

Switching Eco Mode on or off

Eco Mode is useful when going on vacation if for example you do not wish to switch the appliance off completely and do not need a high degree of cooling. Energy consumption in Eco Mode is lower than in normal operation.

The refrigerator section is regulated to a temperature of 43°F (6°C), the dry compartment in the SmartFresh zone to 34°F (1°C).

If the SuperCool function is turned on, this will be turned off when Eco mode is selected.

- In settings mode, use the < and > arrow buttons to select Eco Mode and select *OK* to confirm your selection.
- Use the arrow buttons < and > to switch the Eco Mode On or Off and confirm your selection with *OK*.

The change in temperature to 43°F (6°C) on the display is the only indication that Eco Mode is switched on.

Tip: You can also switch off the Eco Mode function by directly adjusting the temperature (see “The correct temperature”, section “Setting the temperature”).

Performing a Self Test

Perform a Self Test if you are concerned that your appliance is not working properly and want to check if it is suffering from any problems.

- In settings mode, use the < and > arrow buttons to select Self Test and select *OK* to confirm your selection.
- Touch the sensor control if you wish to terminate the process.

The Self Test starts and the appliance is checked for any faults or malfunctions.

– The message System Restarting appears in the display if the Self Test does not discover any faults or malfunctions.

– If the Self Test does discover any faults or malfunctions, they are indicated as error messages in the display.

An alarm also sounds.

- If you find the alarm disruptive, you can switch it off in advance by touching the sensor control.
- Make a note of the error message(s) displayed.
- Contact Technical Service and inform them of the error message(s) on the display.
- Confirm the message with *OK*.

System Restarting appears in the display.

The appliance briefly switches off and then back on automatically.

Self test completed appears in the display.

- Confirm the message with *OK*.

The main screen appears on the display again.

Switching on Door Assistant

You can choose between the two Door Assistants Push2Open and Pull2Open. The default Door Assistant is Push2Open.

The Push2Open Door Assistant is suitable for cabinet fronts without handles. The door will then open automatically when you gently press against it.

The Pull2Open Door Assistant is suitable for cabinet fronts with handles. The appliance door can be opened easily with little force.

When the Door Assistant is switched on, repeatedly closing the appliance door early can lead to damage or malfunctions.
Refrain from holding onto or closing the appliance door while automatic door opening is still extended. If you have indeed closed the appliance door, leave it closed for 5 minutes. Automatic door opening resets itself.

Switching on Push2Open

- In settings mode ⚙, use the < and > arrow buttons to select Door Assistant and select *OK* to confirm your selection.
- Use the < and > arrow buttons to select Mode and touch *OK* to confirm your selection.
- Use the < and > arrow buttons to select Push2Open and touch *OK* to confirm your selection.
- Touch the ⮌ sensor control to return to the previous menu level.

- Adjusting the intensity

You can also adjust the intensity of the Push2Open function. The lower the intensity, the less force required when pushing against the door.

- In settings mode ⚙, use the < and > arrow buttons to select Door Assistant and select *OK* to confirm your selection.
- In settings mode ⚙, use the < and > arrow buttons to select Intensity and select *OK* to confirm your selection.
- Use the < and > arrow buttons to select the desired intensity (Low, Medium, High) and touch *OK* to confirm your selection.

- Adjusting the duration of the Auto-Close function

You can also adjust the duration for how long the appliance door will remain open until it closes automatically.

- In settings mode ⚙, use the < and > arrow buttons to select Door Assistant and select *OK* to confirm your selection.
- In settings mode ⚙, use the < and > arrow buttons to select AutoClose and select *OK* to confirm your selection.
- Use the + and − sensor controls to select the duration (5 to 30 seconds) and touch *OK* to confirm your selection.

To protect against inadvertent opening: if you do not pull the appliance open, it will close again by itself after a duration defined by you (see “Set AutoClose duration”).

Pull2Open

- In settings mode ⚙, use the < and > arrow buttons to select Door Assistant and select *OK* to confirm your selection.
- Use the < and > arrow buttons to select Mode and touch *OK* to confirm your selection.
- Use the < and > arrow buttons to select Pull2Open and touch *OK* to confirm your selection.
- Touch the ⮌ sensor control to return to the previous menu level.

– Adjusting the intensity

You can also adjust the intensity of the Pull2Open function. The lower the intensity, the less force is required when pulling the door.

- In settings mode ⚙, use the < and > arrow buttons to select Door Assistant and select *OK* to confirm your selection.
- In settings mode ⚙, use the < and > arrow buttons to select Intensity and select *OK* to confirm your selection.
- Use the < and > arrow buttons to select the desired intensity (Low, Medium, High) and touch *OK* to confirm your selection.

Switching off Door Assistant

- In settings mode ⚙, use the < and > arrow buttons to select Door Assistant and select *OK* to confirm your selection.
- Use the < and > arrow buttons to select Mode and touch *OK* to confirm your selection.
- Use the < and > arrow buttons to select Off and touch *OK* to confirm your selection.
- Touch the ⮌ sensor control to return to the previous menu level.

Setting up Miele@home

Your appliance is equipped with an integrated WiFi module.

Connectivity is deactivated at the factory.

To use this feature, you will need:

– a WiFi network

– the Miele@mobile app

– a Miele user account. The user account can be created via the Miele@mobile app.

The Miele@mobile app will guide you as you connect your appliance to your home WiFi network.

Once your appliance is connected to your WiFi network you can use the app to carry the following activities, for example:

– Make certain settings on your appliance

– Display information on the operating state of your appliance

– Set up a Miele@home network with additional WiFi-capable Miele appliances

Connecting your appliance to your WiFi network will increase energy consumption, even when the appliance is switched off.

Make sure that the signal of your WiFi network is sufficiently strong in the place where you want to set up your appliance.

Miele@mobile app

The Miele@mobile app is available to download free of charge from the Apple App Store® or from the Google Play™ Store.

Download on the App Store

ANDROID APP ON Google Play

Please observe and follow the safety information and warnings in these operating instructions including when you are operating your appliance with the Miele@mobile app.

Connecting your appliance via the Miele@mobile app

You will also require the following to log in:

– the password to your WLAN network

– the password to your appliance

Your appliance's password is its serial number, which can be found on the data plate.

You will find the data plate inside your appliance.

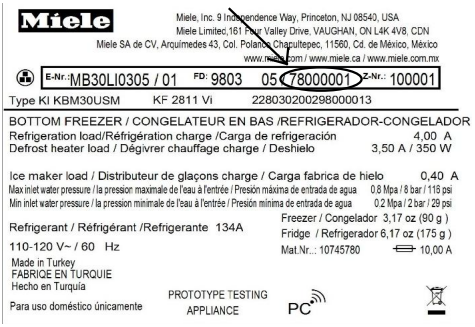

If your serial number is “78000001” for example, your password will be “78000001”.

- In settings mode ⚙, use the < and > arrow buttons to select Miele@home and select *OK* to confirm your selection.

Set up will appear in the display.

- Confirm your selection with *OK*.
- Use the < and > arrow buttons to select via the App and touch *OK* to confirm your selection.
- Open the Miele@mobile app and follow the instructions in the app.
- As soon as your appliance has been integrated into your WLAN network, the message Connection successful appears in your appliance's display.
- Confirm the process with *OK* again.

If the WLAN connection is active, ᯤ will appear in the display.

Connecting your appliance via WPS

Your router must be equipped with the WPS function for this connection option.

- In settings mode ⚙, use the < and > arrow buttons to select Miele@home and select *OK* to confirm your selection.

Set up will appear in the display.

- Confirm your selection with *OK*.
- Use the < and > arrow buttons to select via WPS and touch *OK* to confirm your selection.
- Now follow the instructions in the display.
- Confirm the process with *OK*.

To be able to use the Miele@home functions, you also have to register your appliance in the app.

- As soon as your appliance has been integrated into your home network via WPS, the message Connection successful appears in the display.
- Confirm the process with *OK* again.

If the WLAN connection is active, ᯤ will appear in the display.

Deactivating Miele@home

- In settings mode ⚙, use the < and > arrow buttons to select Miele@home and touch *OK* to confirm your selection.
- Use the < and > arrow buttons to select Deactivate and touch *OK* to confirm your selection.

Deactivation successful appears in the display.

- Confirm the message with *OK*.

Your appliance is now disconnected from your WLAN network.

The ᯤ symbol will go out in the display.

Activating Miele@home

If you have already activated Miele@home and then disconnected the connection, you can still reactivate the connection.

- In settings mode ⚙, use the < and > arrow buttons to select Miele@home and touch *OK* to confirm your selection.
- Use the < and > arrow buttons to select Activate and touch *OK* to confirm your selection.

Activation successful appears in the display.

- Confirm the message with *OK*.

If the WLAN connection is active, 📶 will appear in the display.

Checking the WLAN connection status

- In settings mode ⚙, use the < and > arrow buttons to select Miele@home and select *OK* to confirm your selection.
- Use the < and > arrow buttons to select Connection status and touch *OK* to confirm your selection.

Information about the WLAN connection status will then appear in the display:

– 📶 connected: there is a strong connection,

– 📶 connected: there is an average connection,

– 📶 connected: there is a weak connection,

– 📶: disconnected.

Setting up Miele@home again

If you have changed your WiFi network, you can set up Miele@home again for your appliance.

- In settings mode ⚙, use the < and > arrow buttons to select Miele@home and select *OK* to confirm your selection.
- Use the < and > arrow buttons to select Set up again and touch *OK* to confirm your selection.

Reset configuration? appears on the display.

- Use the < and > arrow buttons to select Yes or No and touch *OK* to confirm your selection.

Switching off Demo Mode

Demo mode allows the appliance to be presented in the showroom **without the cooling system being switched on**. Do not activate this setting for domestic use.

If Demo mode has been switched on as a default setting, will show in the display.

- In settings mode, use the < and > arrow buttons to select Demo Mode and select *OK* to confirm your selection.

Press OK for 4 seconds to deactivate appears in the display.

- Follow the instructions on the display and touch and hold the sensor control *OK* for 4 seconds.

The countdown Demo Mode will deactivate in seconds. will appear in the display.

Demo Mode deactivated. The appliance will cool down. appears in the display.

- Confirm the message with *OK*.

The main screen appears in the display again.

Resetting the settings to their default settings

You can reset the appliance's settings to their default settings.

- In settings mode, use the < and > arrow buttons to select Factory Default and select *OK* to confirm your selection.
- Use the < and > arrow buttons to select Reset and touch *OK* to confirm your selection.

After a brief delay, Settings Reset appears in the display.

- Confirm the message with *OK*.

The initial start-up process restarts (see “Starting up for the first time”).

The appliance's settings will be reset to the following values:

	Function	Default settings
	Language	English
	Display Brightness	Average value (4 of 7 segments)
	Color Scheme	Dark
/	Buzzer Tones	Average value (4 of 7 segments)
/	Keypad Tone	Average value (4 of 7 segments)
°F / ° C	Temperature Unit	°Fahrenheit
/	Keypad Lock	Switched off
	Master-Fresh	32°F (0°C) (2 of 5 segments)
	Eco Mode	Switched off
	Door Assistant	Push2open
	Miele@home	Switched off
	Sabbath Mode	Switched off
	Display Active Air-Clean Filter	Switched on
	Temperature in the refrigerator section	37°F (4°C)
	Temperature in the dry compartment	32°F (0°C)

Switching Sabbath Mode On/ Off

The appliance offers a Sabbath Mode for the purposes of religious observance.

If Sabbath Mode is switched on, appears in the display.

When Sabbath Mode is switched on, you cannot make any settings on your appliance.

Ensure that the appliance door is properly closed, as visual and audible alarms are switched off in Sabbath mode.

- In settings mode, use the < and > arrow buttons to select Sabbath Mode and select *OK* to confirm your selection.
- Use the < and > arrow buttons to select On or Off and touch *OK* to confirm your selection.

When Sabbath Mode is switched on, appears in the display and the display brightness is reduced (the display does not change when the appliance door is closed).

When Sabbath Mode is switched on, the following functions are switched off:

– Door Assistant
(for cabinet fronts without handles, the appliance door will have to be pulled from the bottom or side)

– Lighting

– All audible and visual signals,

– Temperature display

– The Automatic SuperCool function (if previously switched on)

You can still select:

– The sensor control for Settings Mode so that Sabbath mode can be switched off.

The Sabbath Mode function will switch off automatically after approx. 125 hours.

⚠ Danger of food poisoning!
Any power failure during Sabbath Mode will not be shown on the display. After a power failure, the appliance will restart in Sabbath Mode. When power is restored, no notification of the power failure will appear on the display.
If there is a power failure during Sabbath mode, check the quality of the food.

Switching on, switching off, or resetting the Display Active AirClean Filter

Approximately every 6 months, the Active AirClean filter display will remind you to change the Active AirClean filters (see “Inserting the Active AirClean filters” in “Before first use”). Change Active AirClean Filter will appear in the display.

The first time the Active AirClean filters need to be changed, the display will remind you automatically; the reminder does not need to be switched on separately.

After the Active AirClean filters have been changed, the Active AirClean filter reminder display must be reset (see “Resetting the Active AirClean filter display”).

If the Active AirClean filter reminder display is not reset, it will appear again after 7 days.

If you do not require the Active AirClean filter reminder display, it can be switched off (see “Switching off the Display Active AirClean Filter”).

New Active AirClean filters are available from Miele Technical Service, your Miele dealer, or online.

Switching on the Display Active AirClean Filter

If the Display Active AirClean Filter has been switched off once, it must be switched on again if required.

- In settings mode, use the < and > arrow buttons to select Display Active AirClean Filter and select *OK* to confirm your selection.
- Use the < and > arrow buttons to select On and touch *OK* to confirm your selection.

The Display Active AirClean Filter has been switched on.

Switching off the Display Active AirClean Filter

If you do not require the Display Active AirClean Filter, you can switch it off.

- In settings mode, use the < and > arrow buttons to select Display Active AirClean Filter and select *OK* to confirm your selection.
- Use the < and > arrow buttons to select Off and touch *OK* to confirm your selection.

The Display Active AirClean Filter has been switched off.

Resetting the Display Active AirClean Filter

The Display Active AirClean Filter must be reset each time the filter is replaced, so that it is displayed again after 6 months.

- In settings mode, use the < and > arrow buttons to select Display Active AirClean Filter and select *OK* to confirm your selection.

- Use the < and > arrow buttons to select Reset and touch *OK* to confirm your selection.

The Change Active AirClean Filter message disappears from the display.

The Display Active AirClean Filter has been reset.

It is very important to set the correct temperature for storing food in the appliance. Bacteria will cause food which is not stored at the correct temperature to deteriorate rapidly. Temperature influences the growth rate of these bacteria. Reducing the temperature reduces their growth rate.

The temperature in the appliance will rise:

– The more often the door is opened and the longer it is kept open

– The more food that is stored in it

– The warmer the food is which is being put into it

– The higher the ambient temperature surrounding it. The appliance is designed for use within specific ambient temperatures (climate range). Do not use in ambient temperatures for which it is not designed.

... in the refrigerator section and in the SmartFresh zone

We recommend a temperature of 39°F (4°C) in the refrigerator section.

We recommend a temperature of 32°F (0°C) in the dry compartment of the SmartFresh zone.

However, if you would like it to be warmer or colder, e.g., when storing fish, you can adjust the temperature in the dry compartment.

Automatic cold air circulation (DynaCool)

The fan automatically turns on when the cooling system for the refrigerator section turns on. It distributes the temperature in the refrigerator section to all areas evenly so that all the food inside will be chilled to about the same degree.

Setting the temperature

■ Touch the symbol for setting the temperature.

The previously set temperature will appear.

■ Set the temperature you want with the + and − sensor controls. Keeping your finger on the sensor control changes the temperature continuously.

■ Confirm the temperature setting with *OK* or wait approx. 8 seconds after the last touch of the sensor. This temperature will be automatically adopted.

Tip: The newly set temperature can also be confirmed and adopted by closing the appliance door.

The temperature display always shows the **required** temperature.

If you have adjusted the temperature, **wait for approximately 6 hours if the appliance is not very full and for approximately 24 hours if the appliance is full** before checking the temperature display. It will take this long for an accurate reading to be given.

- If, after this time, the temperature is still too high or too low, adjust it again.

Adjusting the temperature in the dry compartment of the SmartFresh zone

The temperature in the dry compartment of the SmartFresh zone is maintained at approx. 32°F (0°C). However, if you would like it to be warmer or colder, you can adjust the temperature slightly (see “Adjusting the temperature in the SmartFresh zone (dry compartment) ” in “Selecting additional settings”).

Tip: You can select a lower setting for storing, for example, particularly delicate fish. A slightly higher temperature is preferable for storing ready-to-eat food, for example.

Temperature range

The temperature in the refrigerator section can be set between 36°F (2°C) and 46°F (8°C).

The temperature in the dry compartment in the SmartFresh zone can be set between 30°F (-1°C) and 37°F (3°C).

SuperCool function

The SuperCool function can be used to rapidly reduce the temperature in the Fridge Zone to its lowest setting (depending on the room temperature).

SuperCool is particularly recommended for the rapid chilling of large amounts of fresh food or drink.

Switching on SuperCool

- Touch the symbol in the display for setting the temperature.
- Then touch the ❄ symbol for turning on the SuperCool function.

The ❄ symbol is highlighted in color and the new temperature setting of 36°F (2°C) appears in the display.

- Confirm the setting with OK or wait approx. 8 seconds after the last press of the button. The setting will be automatically adopted.

The appliance will now run at maximum power.

Switching off SuperCool

- Touch the symbol in the display for setting the temperature.

The ❄ symbol is highlighted in color and a temperature value of 36°F (2°C) is shown in the display.

- Touch the ❄ symbol to turn off the SuperCool function.

The ❄ symbol is no longer highlighted in color and the previous temperature setting appears again in the display.

- Confirm the setting with OK or wait approx. 8 seconds after the last press of the button. The setting will be automatically adopted.

The appliance will then continue running at normal power.

If you do not turn off the SuperCool function, it will turn itself off automatically after approx. 6 hours. The appliance will then run at normal power again.

Tip: To save energy, the SuperCool function can be turned off once food and drinks are sufficiently chilled.

Door alarm

The appliance is fitted with a warning system to avoid increased energy consumption if the door is left open.

An alarm will sound if the appliance door has been left open for longer than approx. 2 minutes.
The message Close the door also appears in the display.

As soon as the door is closed, the alarm will stop and the message in the display will go out.

Turning the door alarm off early

If the alarm disturbs you, it can be turned off early.

- Touch the *OK* sensor control in the display.

The alarm stops and the message disappears from the display.

After a certain time the alarm will sound again and the message will reappear in the display until the appliance door is closed.

Moving the shelves in the appliance door

Danger of injury!
Only move the shelves in the door when they are empty.

The shelves can be moved when loading and unloading and for cleaning or they can be removed completely:

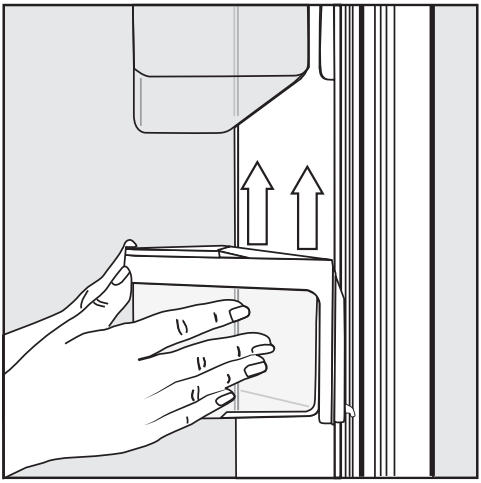

- Hold the shelf on the frame with both hands and lift it slightly so that it can be lifted with the catches on both sides over the guide.
- Remove the shelf or place it in the required position at the back with the catches in the guides at the same height.
- Make sure that the shelf is straight.

Tip: For the purposes of loading and unloading or cleaning, the clip-in containers in the shelves can be removed from their holders completely.

Moving the adjustable shelves

If necessary, the adjustable shelves can be removed or their height can be adjusted:

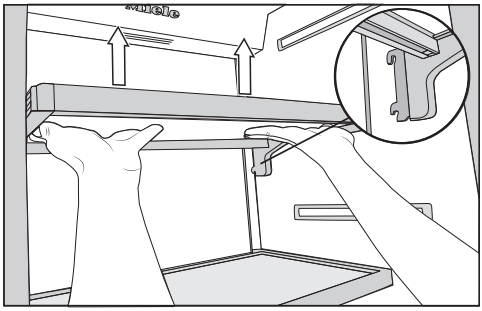

- Hold the shelf on both sides and raise it slightly so that it can be lifted with the catches over the guide at the back.
- Pull the shelf forwards.
- Remove the shelf or place it in the required position, with the catches engaged at the back.
- Make sure that the shelf is straight.

Removing the hanging drawer

The hanging drawer can be moved to the left or right if required.

To clean the hanging drawer, remove it as follows:

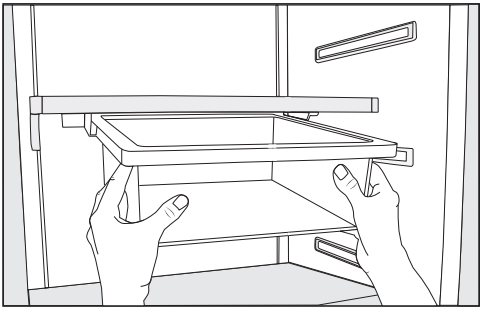

- Pull the hanging drawer straight out to lift it over the pull-out stops.
- To reinsert the hanging drawer, push it straight into the guide.

Removing compartments from the Fridge Zone

The compartments in the Fridge Zone are on telescopic runners, and can be removed for filling, emptying, or cleaning purposes:

- Pull the compartment out a little bit.

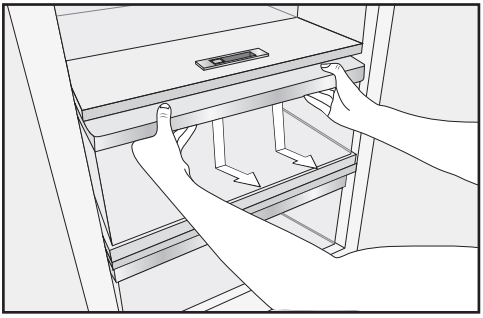

- Using both hands, grasp the compartment frame from below and push the compartment downwards so that the rear end disengages and lifts upwards.
- Pull the compartment forwards to remove it.

Push the runners back in again to avoid damaging them!

Be careful not to wash away the special lubricant in the telescopic runners during cleaning.
Wipe the telescopic runners with a damp cloth to clean them.

- To reinsert the compartment, position it on the telescopic runners so that it clicks into place.

Always observe USDA food safety guidelines.

⚠ Risk of fire from electrical appliances.

Operating electrical devices in the appliance can cause sparks to form.

Do not operate any electrical devices inside the appliance.

⚠ Risk of explosion due to flammable mixes of gases.

Electrical components can cause flammable mixes of gases to ignite.

Do not store any explosive materials or products containing flammable propellants (e.g., spray cans) in the appliance. The spray cans in question can be identified by the contents printed on the can or by a flame symbol. Electrical components can cause escaping gases to ignite.

⚠ Risk of damage due to greasy or oily foods.

If storing food which contains a lot of fat or oil in the appliance or the door, make sure that it does not come into contact with plastic components as this could cause stress cracks or break the plastic.

Make sure that no fat or oil leaks onto the plastic parts of the appliance.

Different storage zones

Due to natural air circulation, there are different temperature zones in the refrigerator section.

Cold, heavy air sinks to the lowest section of the refrigeration section. Make use of the different zones when placing food in the appliance.

Tip: To allow air to circulate efficiently, do not pack food too closely together in the refrigerator.

If there is insufficient air circulation, the cooling performance will decrease and energy consumption will increase.

Do not cover the fan in the rear wall of the appliance.

Tip: Do not store food in such a way that it touches the rear wall of the refrigerator section as it may freeze to the rear wall.

This appliance has DynamicCooling, which helps to keep an even temperature when the fan is running. When DynamicCooling is turned on, the difference between the various zones is less pronounced.

Warmest area

The warmest area in the refrigerator section is in the top section of the door. Use this for storing butter so that it remains spreadable and cheese so that it retains its flavor.

Coldest area

The coldest area in the refrigerator section is inside the appliance at the back. The temperature in the dry compartment of the SmartFresh zone is even colder.

Use this area in the refrigerator section and in the dry compartment of the SmartFresh zone for all delicate and highly perishable food, e.g.:

– Fish, meat, poultry
– Cold cuts, ready-made meals
– Dishes or baked goods containing eggs or cream
– Fresh dough, cake mixtures, pizza dough, or pie dough
– Raw milk cheese and other raw milk products
– Pre-packed vegetables and other fresh food whose best-before date requires storage at a temperature of at least 39°F (4°C).

Food which is not suitable for storage in the refrigerator section

Not all food is suitable for refrigeration at temperatures below 41°F (5°C) because it is sensitive to cold. Depending on the type of food, the appearance, consistency, flavor, and/or vitamin content may be altered if stored at too cold a temperature.

Foods which are sensitive to cold include:

– Pineapples, avocados, bananas, pomegranates, mangoes, melons, papayas, passion fruit, citrus fruits such as lemons, oranges, mandarins, grapefruits
– Fruit (which is not yet ripe)
– Eggplants, cucumbers, potatoes, peppers, tomatoes, zucchini
– Hard cheeses (e.g., Parmesan)

Notes on buying food

The freshness of food when first placed in the appliance is an important factor in determining how long it stays fresh, and how long it can be kept in the appliance.
Take into account the use-by date and the correct storage temperature.
Time out of the refrigerator, e.g., transporting food in a warm car, should be kept to a minimum.

Tip: Take a cool bag when shopping, and load food in the appliance as soon as possible.

Storing food correctly

Food should generally be stored covered or packaged in the refrigerator section (there are some exceptions to this rule in the PerfectFresh zone - see below). This will prevent food smells from affecting other foods, food from drying out, and also any cross-contamination of bacteria. This is especially important for storing animal products.
The shelf life of food can be significantly increased by setting the correct temperature and maintaining good standards of hygiene.

Storing food in the SmartFresh zone

SmartFresh zone

The SmartFresh zone provides ideal storage conditions for fruit, vegetables, fish, meat, and dairy products. Food stays fresh considerably longer while retaining both flavor, and vitamins.

The SmartFresh zone comprises a humidity-controlled and a dry compartment.

– Depending on the moisture-regulator setting, the **humidity-controlled compartment** is particularly suitable for **storing fruit and vegetables**.

– The **dry compartment** is suitable for **storing perishable foods** such as fish, meat, and dairy products.

Humidity-controlled compartment with moisture regulator

The humidity level in the humidity-controlled compartment can be regulated to approximately suit the food being stored. Food retains its own moisture if stored at a higher humidity and so does not dry out as quickly. This allows it to stay crisp and fresh for longer.

The moisture released by food in storage is kept within the humidity-controlled compartment drawer. The closer the air humidity in the humidity-controlled compartment is to the humidity content of the food, the crisper and fresher the food remains over a longer period, as the water content of the food is largely retained.

The moisture level greatly depends on the type and quantity of food being stored, if stored unwrapped.

The temperature in the humidity-controlled compartment is approximately equivalent to the temperature in the conventional refrigerator section.

Remember that the fresher the food when it is placed in the appliance, the longer it will stay fresh!

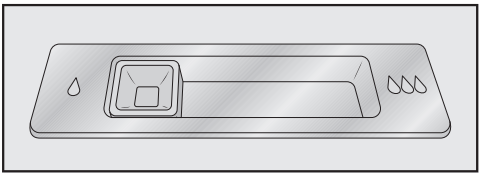

Slide control at ◊ = moisture increased slightly

We recommend this setting ◊ if you store **very large quantities of** fruits and vegetables in the humidity-controlled compartment. The slide control partially closes the vents in the compartment so that some of the moisture present is retained.

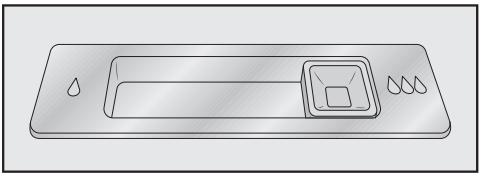

Slide control at ◊◊◊ = moisture increased

We recommend this setting ◊◊◊ if you store **small to large quantities of** fruits and vegetables in the humidity-controlled compartment. The slide control closes the vents in the compartment completely so that all of the moisture present is retained.

Tip: If the humidity level is too high and a lot of moisture has collected in the compartment, select the ◊ setting.
If the quantity of food being stored in this compartment is small, the moisture level may be too low. If you are only storing a small amount of food, wrap it in airtight packaging.
The humidity level in the humidity controlled compartment is determined by the type and quantity of food being stored when it is not packaged.

Increased moisture in the humidity-controlled compartment can, in some circumstances, cause a build-up of condensate.
This should be removed with a cloth.

Regulating the humidity level in the humidity-controlled compartment

The slide control is used to regulate the amount of moisture in the humidity controlled compartment with settings ◊ to ◊◊◊.

- Slide the control to the left ◊ or right ◊◊◊ depending on the setting required.

Dry compartment with adjustable temperature

The temperature in the dry compartment is maintained at 30 to 37°F (-1 to 3°C). While lower than the temperature in a standard refrigerator, this is the optimum temperature range for storing fresh food which is not sensitive to cold. The deterioration process is decelerated at this temperature range so food can be stored without loss of freshness for considerably longer than in a standard refrigerator.

However, if you would like it to be warmer or colder, e.g., when storing fish, you can adjust the temperature slightly (see “Adjusting the temperature in the SmartFresh zone (dry compartment)” in “Selecting additional settings”).

The humidity level is similar to that in the conventional refrigerator section.

The dry compartment is suitable for storing perishable foods such as:

– Fresh fish and shellfish
– Meat and poultry
– Deli salads
– Dairy products such as yogurt, cheese, cream, etc.
– Any type of food can in fact be stored in this compartment, as long as it is packaged.

Please note that foods rich in protein deteriorate faster than others. Shellfish, for example, deteriorates faster than fish, and fish deteriorates faster than meat.

For hygiene reasons, always keep these foods **covered or wrapped** in this compartment.

Take food out of the dry compartment approximately 30 to 60 minutes before using it. The aroma and taste do not fully develop until the food has reached room temperature.

	Max. load of the drawers in the SmartFresh zone
K 26x1 Vi/SF	55 lb (25 kg)
K 28x1 Vi/SF	77 lb (35 kg)
K 29x1 Vi/SF	100 lb (45 kg)

The following tips may help if you find that food you have stored does not keep well (for example, the food wilts or becomes withered after only a short storage time):

- Only place fresh food in the appliance as the initial condition of the food is crucial to maintaining freshness.
- Clean the SmartFresh zone before storing food in it.
- Very wet food should be dried off before storing it in the humidity-controlled compartment.
- Do not store food which is sensitive to cold in the dry compartment (see “Food which is not suitable for storing in the refrigerator section”).
- Allocate the appropriate settings to food you wish to store (e.g., humid or dry storage).
- Store food loose in the humidity-controlled compartment.
  A high humidity level in the humidity-controlled compartment is achieved by the moisture present in the food being stored.
  If the humidity level is not high enough (e.g., too little food is being stored), it can be increased by placing a damp sponge in the drawer.
- If you think that the temperature in the dry compartment is too high or too low, adjust the temperature in the compartment (see “Temperature range” in “The correct temperature”). If ice crystals start to form on the floor of the dry compartment, increase the temperature as otherwise the cold temperature will damage the food.
- If too much water collects at the bottom of the humidity-controlled compartment, dry it with a cloth. If necessary, dry food before placing it in the appliance or place a rack at the bottom of the humidity-controlled compartment to allow water to drain off.

Automatic defrosting

⚠ WARNING! DANGER of injury and damage!

Do not use any mechanical or other types of aids which are not recommended by the manufacturer to accelerate the defrosting process.

Refrigerator section and SmartFresh drawer

The refrigerator section and the SmartFresh drawer defrost automatically.

Condensate and frost can build up on the back wall of the refrigerator section and the SmartFresh drawer while in use. You do not need to remove this, as it will defrost and evaporate automatically with the warmth generated by the appliance.

⚠ WARNING! DANGER of electric shock!
Unplug the appliance or trip the circuit breaker.

⚠ WARNING! Fire hazard!
Do not damage the coolant pipework.

Do not let water get into the electronic unit or the lighting.

Do not use a steam cleaner. Steam from a steam cleaning appliance could reach the electrical components and cause a short circuit.

The data plate located inside the appliance must not be removed. It contains information which is required in the event of a service call.

Cleaning agents

To avoid damaging the surfaces of your appliance, **do not** use

- cleaning products containing soda, ammonia, acid, or chloride,
- lime scale removers,
- abrasive cleaning products, such as scouring powder, scouring liquid, or pumice stones,
- cleaners containing solvents,
- stainless steel cleaners,
- dishwasher detergent,
- oven sprays,
- glass cleaning agents,
- hard, abrasive sponges and brushes, such as pot scrubbers,
- eraser sponges,
- sharp metal scrapers.

Cleaning and conditioning agents used inside the appliance must be food safe.

Use warm water and liquid dish soap.

The following pages contain important information on cleaning.

Before cleaning the appliance

- Turn the appliance off completely by pressing the On/Off switch.
- Unplug the appliance or switch off the fuse.
- Take any food out of the appliance and store it in a cool place.
- Take out all other removable parts for cleaning (see “Adjusting the interior fittings”).

Interior and accessories

Clean the appliance regularly, or at least once a month.

Clean up any spills, stains, or food immediately. Do not allow them to dry and stick to the appliance.

- Clean the appliance with a solution of lukewarm water and liquid dish soap. Rinse all parts by hand. Do not wash in a dishwasher.
- After cleaning, wipe with clean water and dry with a soft cloth.
- Leave the door open to air the appliance sufficiently for a short while and to prevent odor buildup.

Aluminum frames

The frames to the shelves inside the appliance and the door shelves are partially made from aluminum.

Aluminum is a dynamic material. The reflection and appearance of aluminum changes in different lights and environments and depending on the angle you observe it from. It is also susceptible to scratching.

The aluminum frames may become discolored or damaged if soiling is left on for too long. Remove any soiling immediately.

Appliance front

The appliance front has a special high-quality finish (Clean Touch Steel). This is resistant to soiling and is very easy to clean.

⚠ **Do not use stainless steel cleaning agent** on these surfaces, as it will damage the finish.

Do not use Miele stainless steel conditioning agent on these surfaces, as it will cause noticeable smearing.

If soiling is allowed to sit for any length of time, it may become impossible to remove.

Surfaces may be discolored or altered.

It is therefore best to remove soiling from the appliance front immediately.

All surfaces are easily scratched. Contact with unsuitable cleaning agents can alter or discolor the surfaces.

See the information on “Cleaning agents” at the beginning of this section.

- Clean the surfaces with a clean sponge and a solution of warm water and liquid dish soap. A clean, damp microfiber cloth without cleaning agent can also be used for cleaning.
- After cleaning, wipe with clean water and dry with a soft cloth.

Cleaning the door seal

Do not use any grease or oil on the door seal as these will cause the seal to deteriorate and become porous over time.

- The door seal should be cleaned regularly with clean water and then wiped thoroughly dry with a soft cloth.

Cleaning the ventilation grilles

A build-up of dust will increase the energy consumption of the appliance.

- The air vents should be cleaned on a regular basis with a brush or vacuum cleaner (you could use a Miele vacuum cleaner dusting brush, for example).

After cleaning

- Replace all shelves and accessories in the appliance.
- Reconnect to the power supply and switch the appliance back on.
- Switch on the SuperCool function for a while so that the refrigerator section can cool down quickly.
- Switch off the SuperFrost function as soon as the temperature in the freezer is a constant 0°F (-18°C) or colder.
- Place food back in the appliance and close the door.

Frequently Asked Questions

With the help of the following guide minor faults in the performance of the machine, some of which may result from incorrect operation, can be remedied without contacting the Service Department.

This guide may help you to find the reason for the fault, and how to correct it.

To prevent cold from escaping, open the appliance doors as little as possible until the fault has been corrected.

Problem	Possible cause and solution
If you are concerned that your appliance is not working properly, you can perform a Self Test**. Your appliance will be checked for any faults or malfunctions.**	Any errors identified during the Self Test are shown on the display. ■ Perform a Self Test (see “Additional settings”, section “Performing a Self Test ☑”). ■ Contact Technical Service and inform them of the error message(s) on the display.
The appliance is not getting cold and the interior lighting does not come on when the appliance door is opened.	The appliance has not been turned on. ■ Turn the appliance on. The temperature appears in the display.
	The plug is not properly plugged into the electrical outlet. ■ Insert the plug into the outlet.
	The fuse has tripped. There could be a fault with the appliance, the household electrical wiring, or another appliance. ■ Contact a technician or the Technical Service department.

Problem	Possible cause and solution
The compressor is turning on more frequently and for longer periods of time; the temperature in the appliance is too low.	The ventilation gaps in the cabinetry have been covered or become too dusty. ■ Do not block the ventilation gaps. ■ Clean the ventilation gaps on a regular basis to remove any dust.
	The door has been opened too frequently, or a large amount of food has just been put in at once. ■ Only open the door when necessary and for as short a time as possible. After a while, the temperature will return to normal by itself.
	The appliance door is not properly closed. ■ Close the door. After a while, the temperature will return to normal by itself.
	The ambient temperature is too high. The higher the ambient temperature, the longer the compressor has to run. ■ See “Installation location”.
	The appliance was not properly installed in the niche. ■ See “Installation - Building in the appliance”.
The compressor is turning on more frequently and for longer periods of time; the temperature in the appliance is too low.	The temperature setting is too low. ■ Correct the temperature setting.
	The SuperCool function is still turned on. ■ To save energy, you can turn SuperCool off early yourself.
The compressor comes on less and less often and for shorter periods of time. The temperature in the appliance rises.	This is not a fault. The temperature is too high. ■ Correct the temperature setting. ■ Check the temperature again after 24 hours.
The compressor runs continuously.	Not a fault. To save energy, the compressor runs at a lower speed when less cooling is required. This increases the compressor run time.

Frequently Asked Questions

Problem	Possible cause and solution
An alarm sounds.	The appliance door has been open for longer than 3 minutes. ■ Close the appliance door.
No alarm sounds despite the appliance door being open.	You have switched off the audible signal. ■ Switch the audible signal back on using Settings mode ⚙.
The appliance door cannot be opened.	The Pull2Open Door Assistant is switched on but the appliance has a handle-free cabinet front. ■ For handle-free cabinet fronts, switch on the Push2Open Door Assistant (see “Switching on the Door Assistant” in “Selecting additional settings”).
The appliance door cannot be opened when Sabbath Mode is switched on.	The Push2Open Door Assistant is switched on at the same time as Sabbath Mode. ■ When Sabbath Mode is switched on, the Door Assistant is deactivated. ■ Pull the appliance door open from below or from the side.

Messages in the display

Message	Possible cause and solution
The alarm symbol ⚠ and the sensor for one of the sections have lit up on the display, and an alarm is sounding.	The door alarm has been activated. ■ Close the appliance door. The alarm symbol ⚠ will go out and the alarm will stop.
The warning sounds and the message Close the door **appears in the display.**	The appliance door is open. ■ Close the appliance door. ■ If you wish to turn the alarm off early, touch the sensor control *OK* in the display. The alarm will stop.
The temperature display is dark and ⏸ is shown in the display.	Sabbath Mode is turned on: The interior lighting is turned off and the appliance is cooling down. ■ You can switch off Sabbath Mode at any time (see “Selecting additional settings”, section “Switching Sabbath Mode on and off”).
“F Please contact Miele Technical Service.**” appears in the display and an alarm sounds.**	There is a fault. ■ Make a note of the fault message if necessary. ■ Contact Technical Service. ■ To turn the alarm off, touch the 🔇 symbol. The error message does not disappear from the display until the error has been rectified.
	The voltage level is too high/low. ■ Observe the connection data under “Electrical connections”. ■ Contact Technical Service if necessary. ■ To turn the alarm off, touch the 🔇 symbol. The error message does not disappear from the display until the error has been rectified.
▮ is shown in the display. The machine does not get cold, but the machine controls are working.	Demo Mode ▮ is switched on. Demo mode allows the appliance to be presented in the showroom without the cooling system being turned on. Do not activate this setting for domestic use. ■ Switch off Demo mode ▮ (see “Selecting additional settings”, section “Switching off Demo Mode ▮”).

The interior lighting is not working.

Problem	Possible cause and solution
The interior lighting is not working.	The appliance has not been turned on. ■ Turn the appliance on.
	Sabbath Mode is switched on: The temperature display is dark and is shown in the display. ■ You can switch off Sabbath Mode at any time via Settings mode.
	There is a fault. ⚠ Risk of electric shock! There are live electrical components under the lighting cover. The LED lighting may only be repaired or replaced by Technical Service. ⚠ Risk of injury from LED lighting! The light intensity corresponds to laser beam class 1/1M. The lighting covers must not be removed or damaged, or be removed due to damage. This could cause injury to your eyes. Do not look into the LED lighting (laser beam class 1/1M) with optical instruments (e.g., a magnifying glass). ■ Contact Technical Service.

Normal noises	Cause
Brrrrr...	A humming noise is made by the motor (compressor). This noise can get louder for brief periods when the motor switches on.
Blub, blub...	A gurgling noise can be heard when the coolant circulates through the pipes.
Click...	Clicking sounds occur whenever the thermostat switches the motor on or off.
Crack...	A cracking sound can be heard when materials expand inside the appliance.
Please bear in mind that a certain amount of noise is unavoidable (from the compressor and the coolant circulating through the system).	

Noises	Cause and solution
Rattling, clinking	The appliance is uneven. Realign the appliance using a level, by raising or lowering the adjustable feet underneath the appliance or placing something underneath it.
	The appliance is touching another machine or piece of furniture. Move it away.
	Drawers, baskets or shelves are jiggling or are stuck. Check all removable parts and refit them correctly if required.
	Bottles or containers are touching each other. Separate them a little.

Technical Service

Contact in case of fault

In the event of a fault which you cannot remedy yourself, please contact your Miele dealer or Miele Technical Service.

Contact information for Miele Technical Service can be found at the end of this document.

Please quote the model and serial number of your appliance when contacting Miele. Both pieces of information can be found on the data plate.

You will find the data plate inside your appliance.

Warranty

For more information about warranty conditions, please contact Miele Technical Service.

Frequency band	2,412 GHz – 2,462 GHz
Maximum transmitting power	< 100 mW

Copyright and licenses

Miele uses software to operate and control the appliance.

The copyright authorization from Miele and other relevant software suppliers must be respected.

Miele and its suppliers reserve the rights to the software components.

In particular the following are prohibited:

– Copying and distribution

– Modifications and derivations

– Decompression, reverse engineering, disassembling, and other such reductions of software

Components which fall under GNU General Public Licence and further Open Source licenses are integrated into the software.

An overview of the integrated Open Source components and a copy of the current license can be obtained at http://www.miele.com/device-software-licenses. You will need to enter the specific product name.

Miele will provide the source code for all components of software licensed under the GNU General Public Licence and comparable Open Source licenses.

For source code requests, please e-mail info@miele.com.

Please have the model and serial number of your appliance available when contacting Technical Service.

U.S.A.

Miele, Inc.

National Headquarters
9 Independence Way
Princeton, NJ 08540
Phone: 800-843-7231
Fax: 609-419-4298
www.mieleusa.com

Technical Service & Support
Phone: 800-999-1360
Fax: 888-586-8056
TechnicalService@mieleusa.com

International Headquarters
Miele & Cie. KG
Carl-Miele-Straße 29
33332 Gütersloh
Germany

Canada

Importer
Miele Limited

Headquarters and Miele Centre
161 Four Valley Drive
Vaughan, ON L4K 4V8
www.miele.ca

Customer Care Centre
Phone: 800-565-6435
905-532-2272
customercare@miele.ca

Miele

K 2601 SF, K 2801 SF, K 2811 SF, K 2901 SF, K 2911 SF

en-US, CA

M.-Nr. 10 785 080 / 01